TERBERG SPECIAL VEHICLES

FORKLIFTCENTER

> INDEX:

- Introduction
- Ergonomy & Safety features
- Main components
- Options

TERBERG
YT 182 / 222 / 282

The next generation Terminal Tractors

TERBERG SPECIAL VEHICLES

FORKLIFTCENTER

INTRODUCTION

TERBERG YT - 182 / 222 / 282

INTRODUCTION

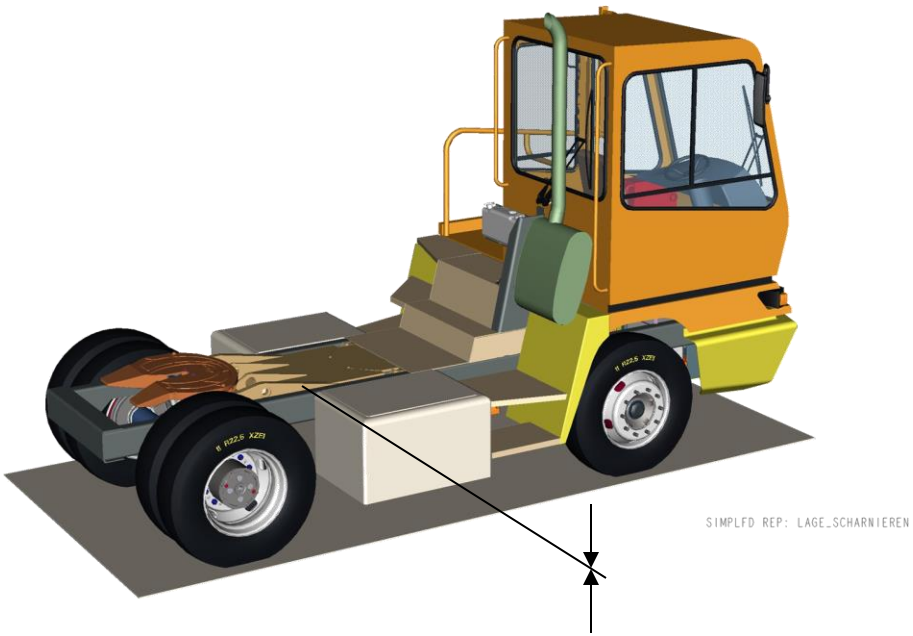

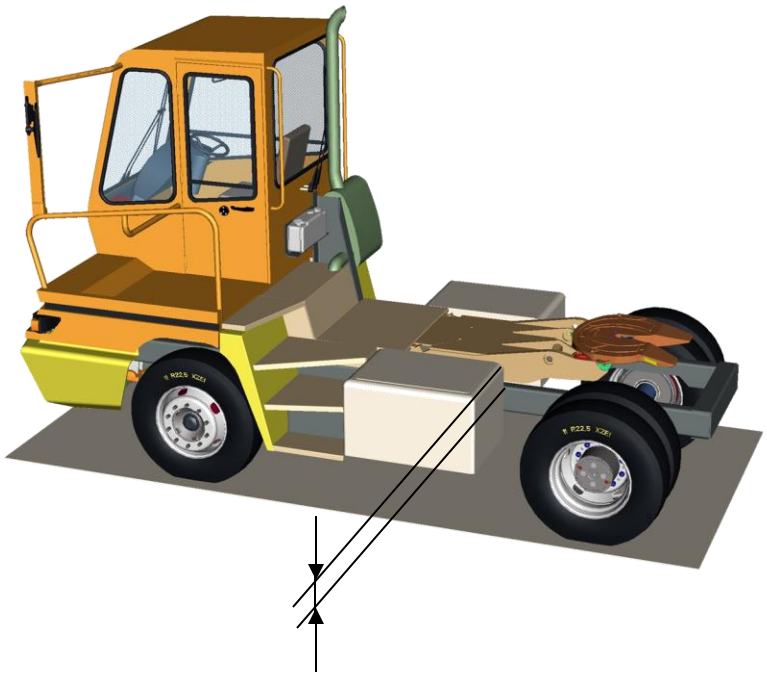

> LOW MOUNTED LIFTFRAME

Lift Capacity
Max. 27 / 31 TON

> HIGH MOUNTED LIFTFRAME

Lift Capacity
Max. 34 / 36 TON

> DECK HEIGHT ADJUSTED TO LIFTFRAME POSITION

> INTERIOR

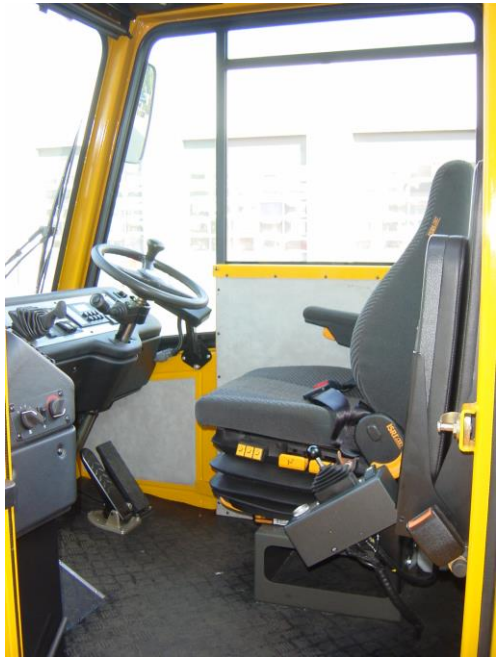

> CABIN HEATING SYSTEM

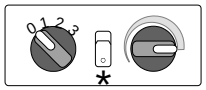

Switch Heater | Switch airco (Optional) | Temperature control

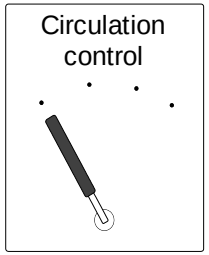

HEATER CONTROL

> ELECTRO SWITCHBOX

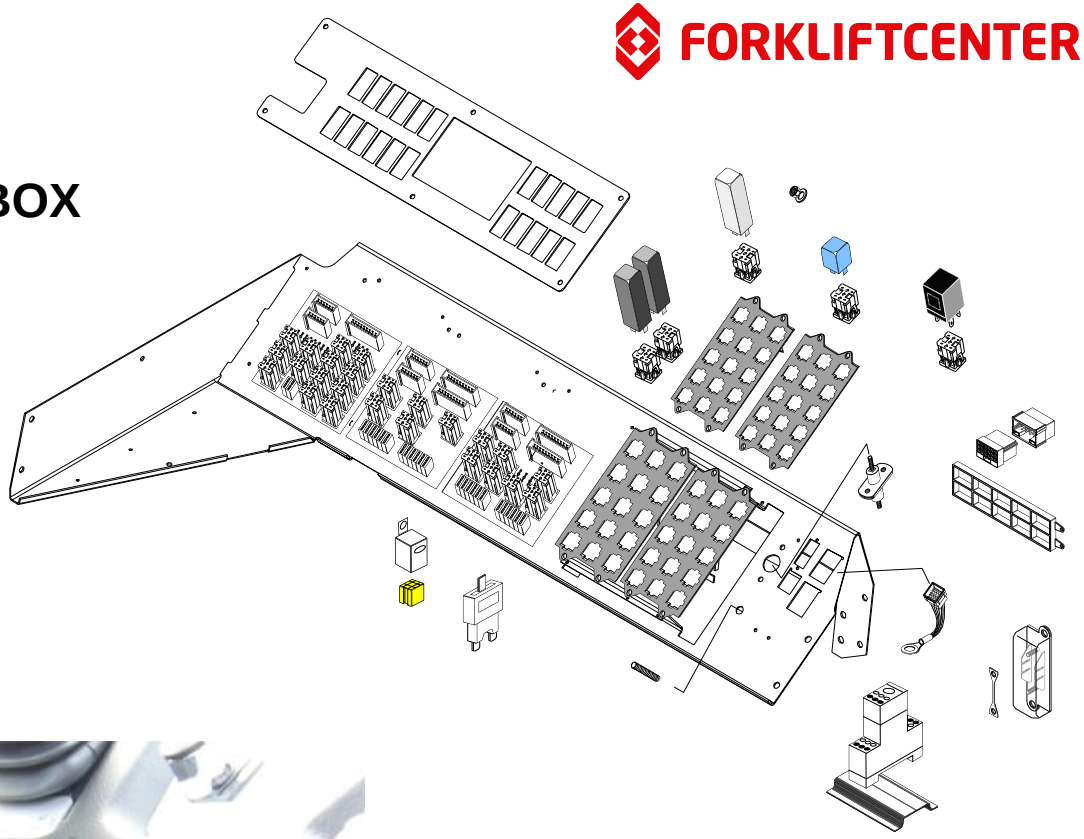

> Switches & check lights with LED

> TURNING CIRCLE

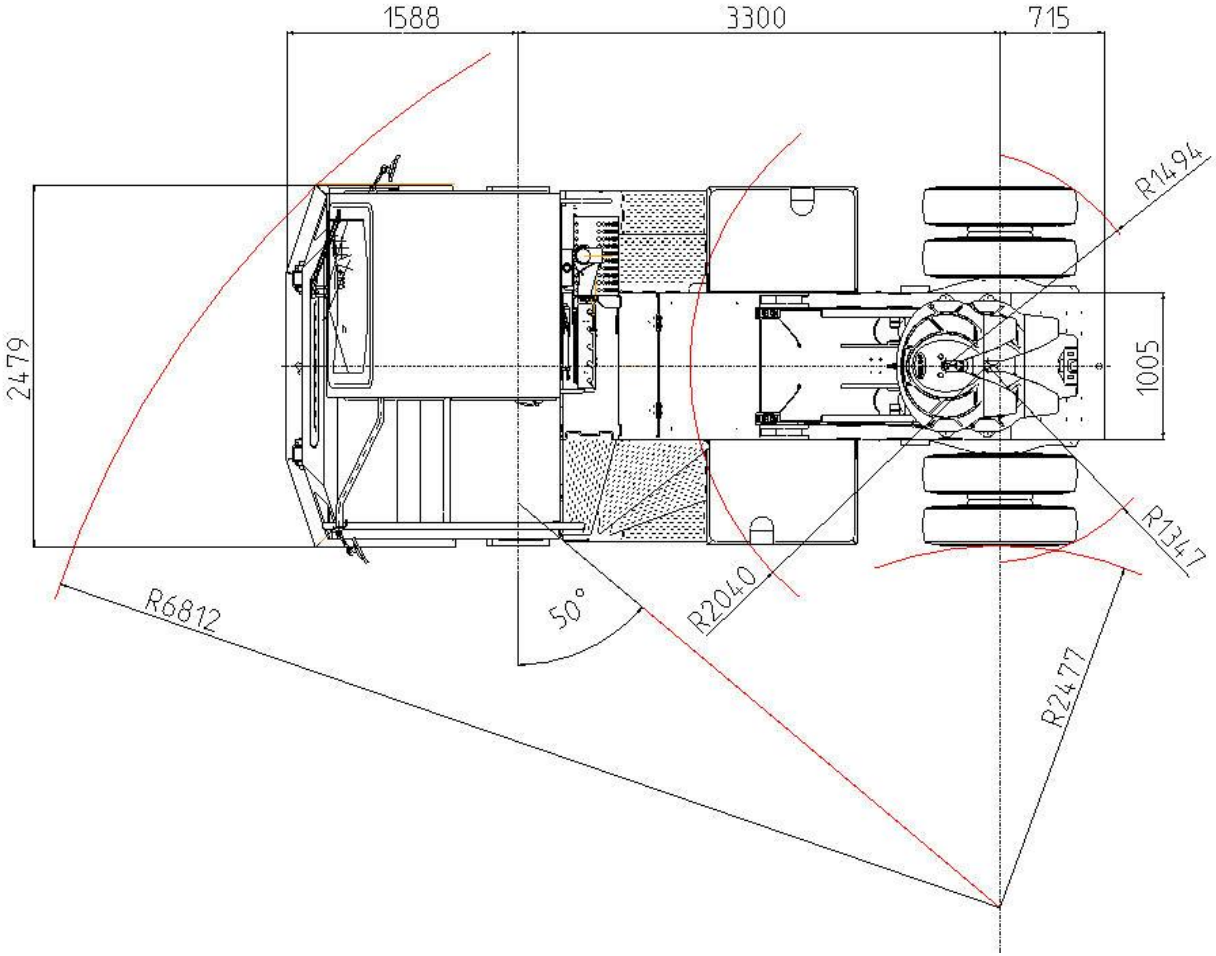

MAX. STEERANGLE YT= 50°
DIMENSIONS VARY BY
DIFFERENT WHEELBASES,
TIRE SIZES, ETC.

> SURFACE PROTECTION

> TRACTOR + ASSEMBLY PARTS:

- > Completed chassis construction is prior shot blasted
- > All steelwork is then pre-painted in 2- component chassis coating
- > After the final assembly a final layer of 2- component chassis coating is supplied

> TRACTOR CABIN:

- > All steelwork is shot blasted
- > Cabin seams are filled up with sealing
- > After this it is painted in 3 layers: primer, 2- component epoxy primer & PU finish layer

> ALL PAINT SYSTEMS FULFIL THE LATEST ENVIRONMENTAL REQUIREMENTS

> TOTAL COSTS OF OWNERSHIP

TERBERG CONTRIBUTES TO THE WELL BEING AND OPTIMUM PERFORMANCE OF YOUR STAFF, THROUGH THE FOLLOWING ERGONOMICALLY VERY IMPORTANT MEASURES:

- **Low noise level inside and outside**
- **A very spacious, comfortable cabin**
- **Low cabin vibration level, using special rubber mountings**
- **Cabin air filtration, ensuring a clean driver environment**
- **Optimum temperature control**
- **Ergonomically positioned driver seat and instrument / controls lay out**
- **Standard air suspended seat, giving optimum driving comfort**
- **Safe and easy cabin and work platform entrance**
- **Easy, ergonomical access to all drive line components**
- **Cabin is Rops - Fops tested, to ensure driver safety**

ALL IN ALL WILL THESE MEASURES RESULT IN LESS DRIVER FATIQUE / RISK, WHICH MEANS LESS ACCIDENTS AND ASSOCIATED LABOUR COSTS

> TOTAL COSTS OF OWNERSHIP

TECHNICAL ADVANTAGES:

- Usage of robust and well dimensioned components reduce the M&R requirement
- Easy and simple installation of tractor components for a quick and efficient M&R
- All componentry is installed well protected, to reduce risk of down time due to accidental damage
- Easy and good accessible daily inspection points, increase tractor utilisation and reduce M&R costs

REDUCTION OF FUEL CONSUMPTION:

- Efficient engine cooling
- Inventive, flat radiator, easy to maintain, for an optimal heat exchange
- Optimum steering geometrie reduces rolling resistance and improves tyre lifetime
- Optional possibilities for speed and RPM limitation
- Optional air conditioning cutout
- optional engine cut out after X-minutes of idling

INTRODUCTION

> TERBERG OFFERS OPTIMUM SUPPORT THROUGH:

- > Worldwide network of dealers and distributors waiting to assist you.
- > Large ware house holding all required parts in stock, also for the older Terberg vehicle

- > Fast parts shipment all over the world
- > Internet support for parts and warranty

More info

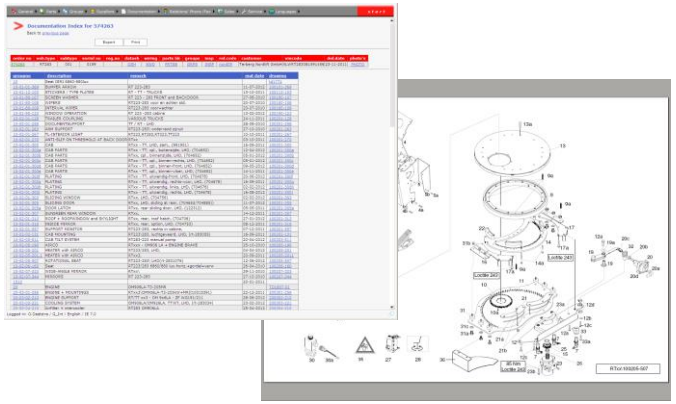

TERBERG SPECIAL VEHICLES

FORKLIFTCENTER

ERGONOMY & SAFETY FEATURES

TERBERG YT - 182 / 222 / 282

ERGONOMY & SAFETY FEATURES

> FROM RIGHT..

> EXCELLENT ACCESS

> FROM LEFT..

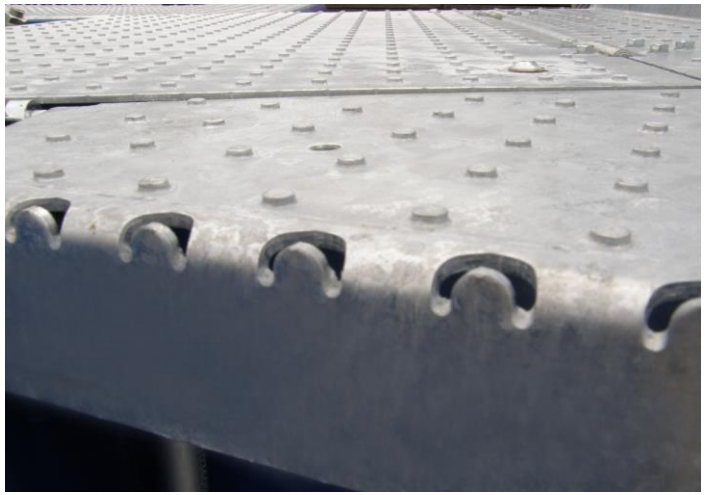

> *NEW* ANTISKID PLATEWORK

> ROPS & FOPS

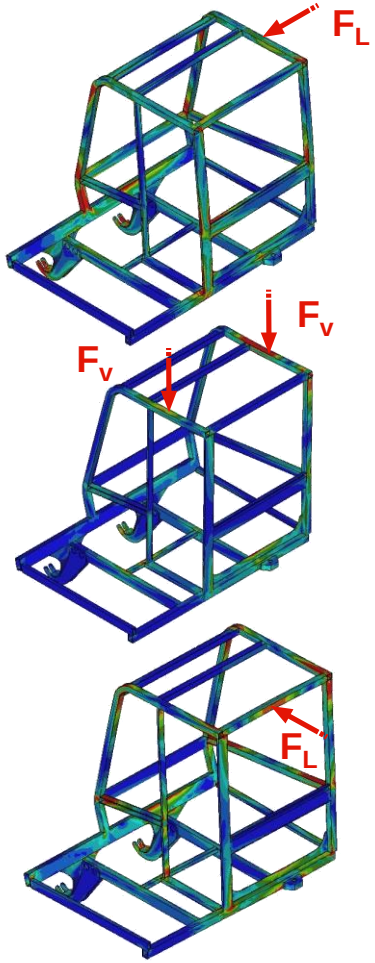

LATERAL IMPACT

VERTICAL IMPACT

LONGITUDINAL IMPACT

ERGONOMY & SAFETY FEATURES

> OPTIMUM VIEW FROM DRIVERS POSITION:

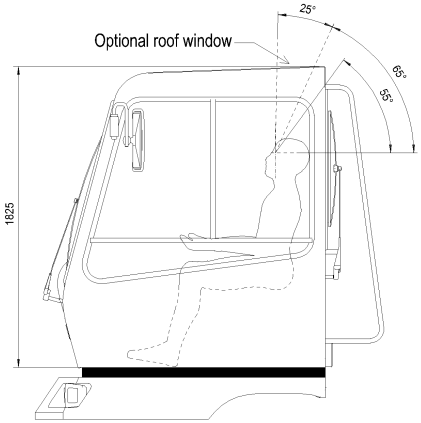

(For right hand drive)

> DOUBLE SLIDING WINDOW

> AIRSUSPENDED ISRI 6860 / 880 DRIVER SEAT

- Automatic weight adjustment
- Pneumatic height adjustment with memory function
- Backrest adjustment
- Horizontal adjustment (230mm)
- Tilt adjustment
- Adjustable shock absorber (100mm)
- Seat cushion adjustment
- Pneumatic lumbar support
- Quick release (air dump)
- 2P seat belt

> Optional

- Arm rests
- Head rest (adjustable / removable)

> EASY MAINTENANCE

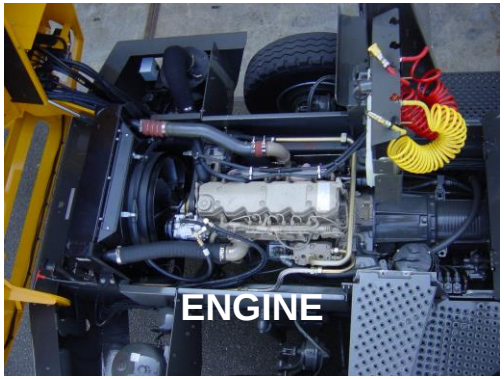

> LOW INSIDE /OUTSIDE NOISE LEVELS

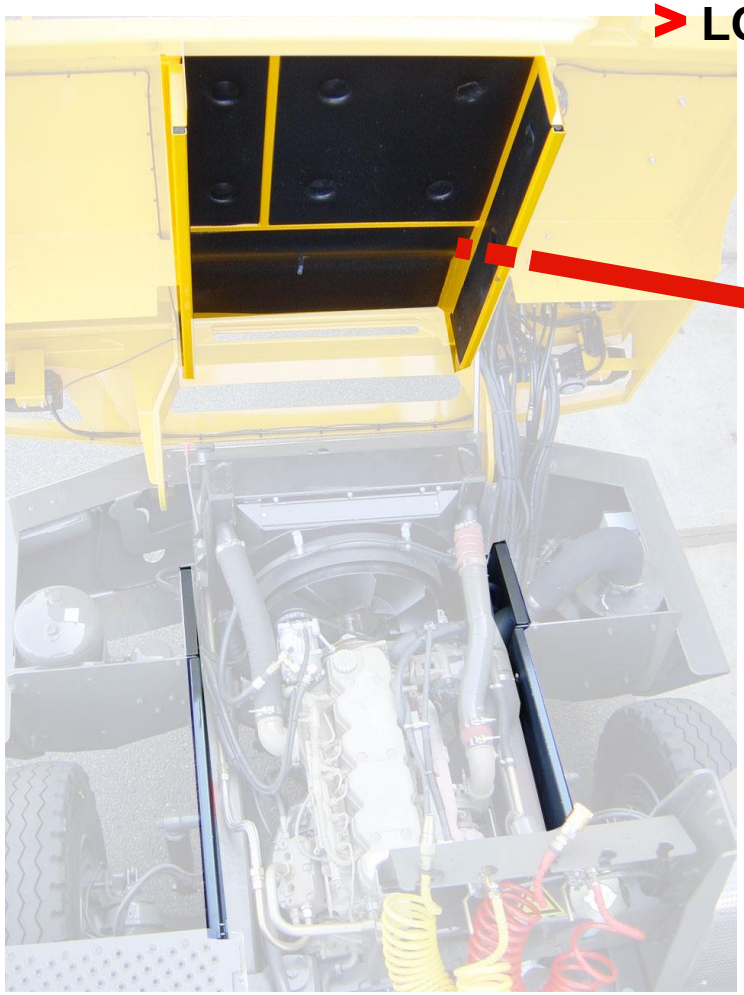

> Noise insulation standard integrated

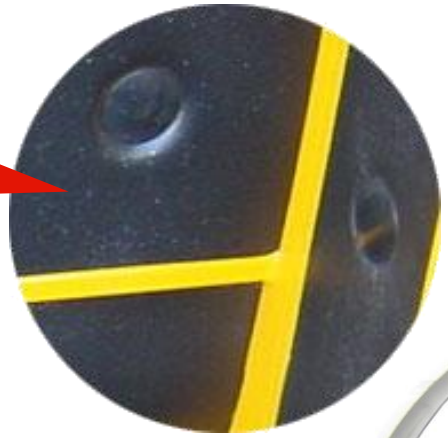

> Engine with visco fan standard

> Newest driveline components are designed to produce less noise

> Standard Allison fuel efficiency package with Low RPM shift programs More info

> Big volume silencer offering best possible silencing

> CAN CONTROLLED ELECTRICAL SYSTEM

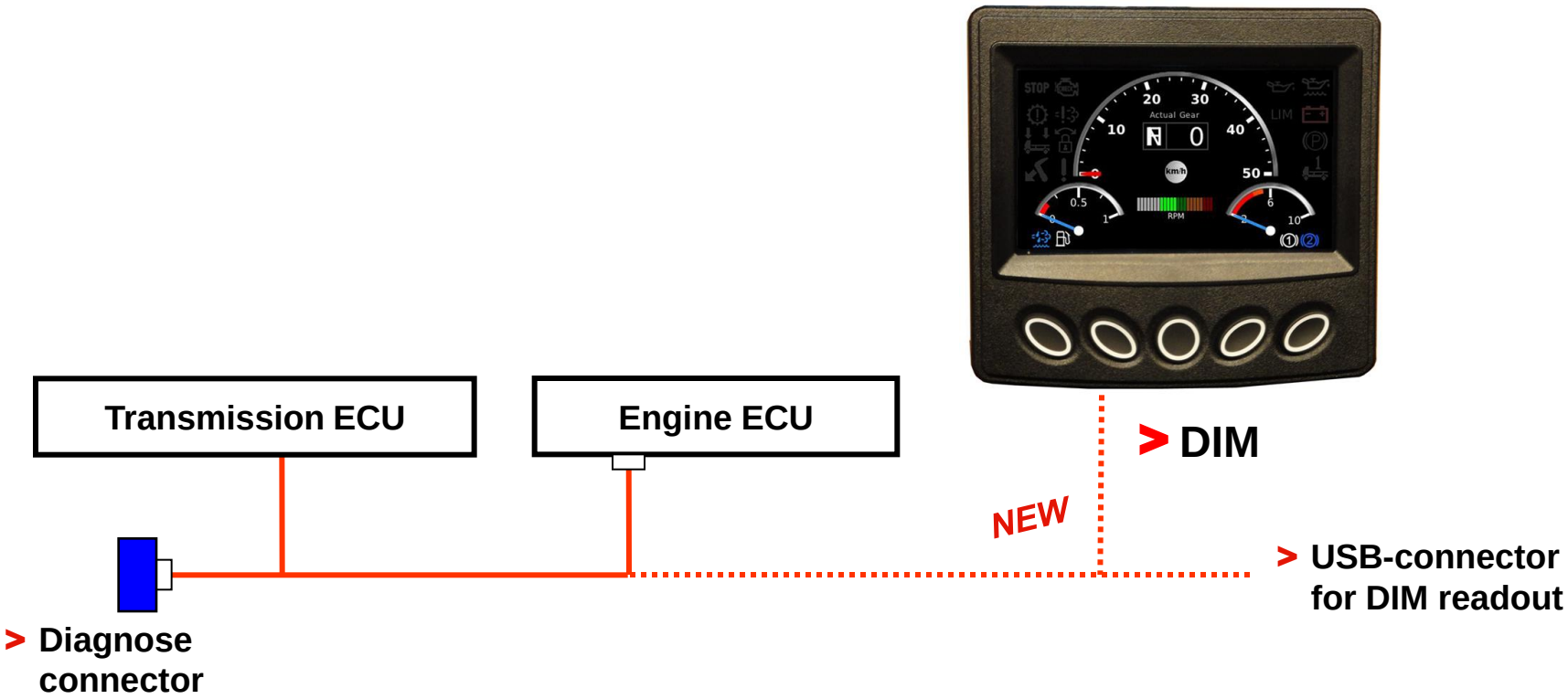

> Standard CAN-bus

> Additional for tractors with emission level EU Stage 3B / Tier 4i engines and above

ERGONOMY & SAFETY FEATURES

> MULTIFUNCTIONAL

NEW

Driver Information Module

- > DIM becomes standard with EU Stage 3B / Tier 4i engines and above
- > For tractors with lower emission level engines the original dashboard instrument stays in use

TERBERG SPECIAL VEHICLES

FORKLIFTCENTER

MAIN COMPONENTS

TERBERG YT - 182 / 222

> RIGID HEAVY DUTY FRAME

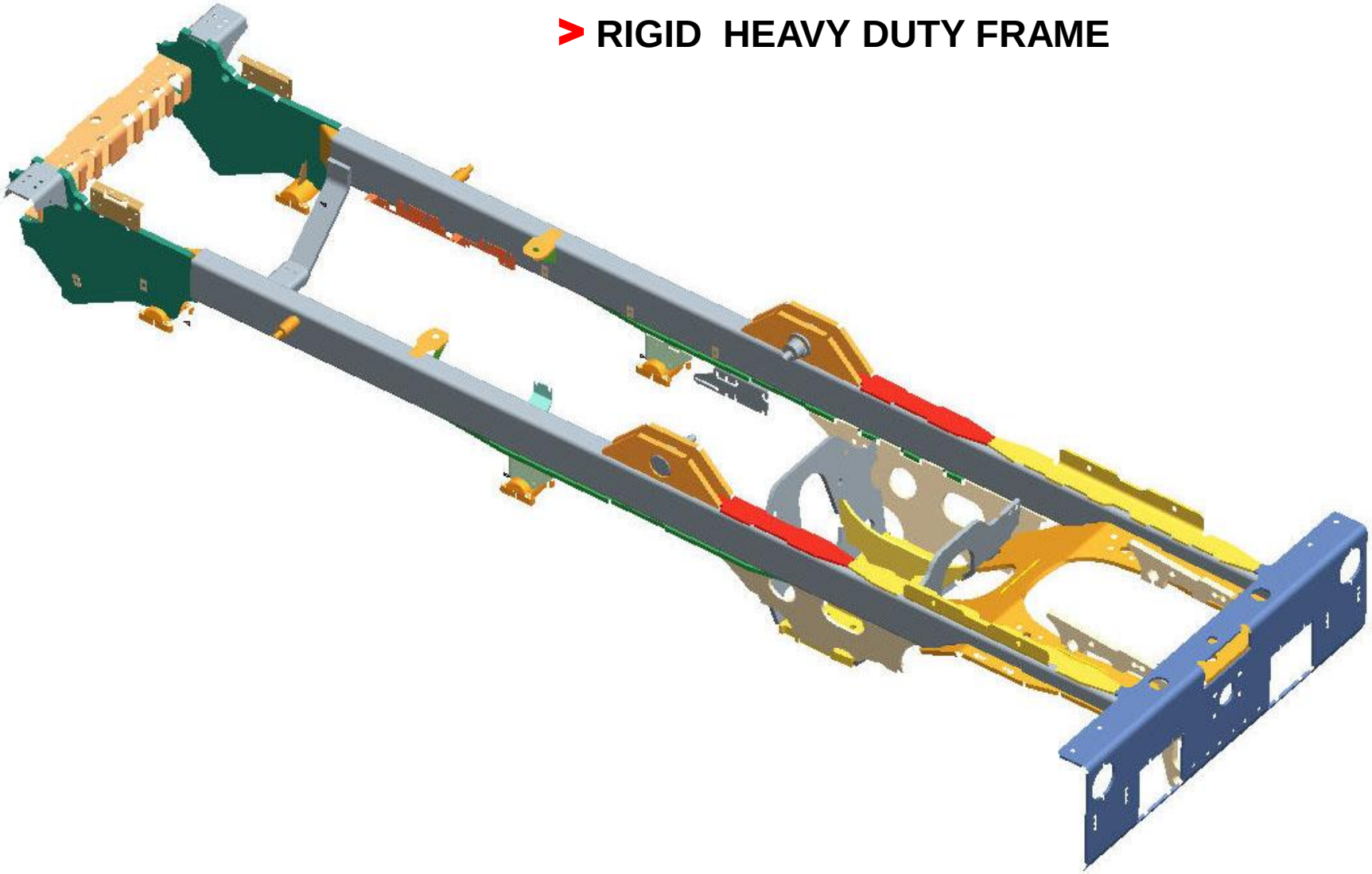

> IMPROVED LIFT FRAME MOUNTING

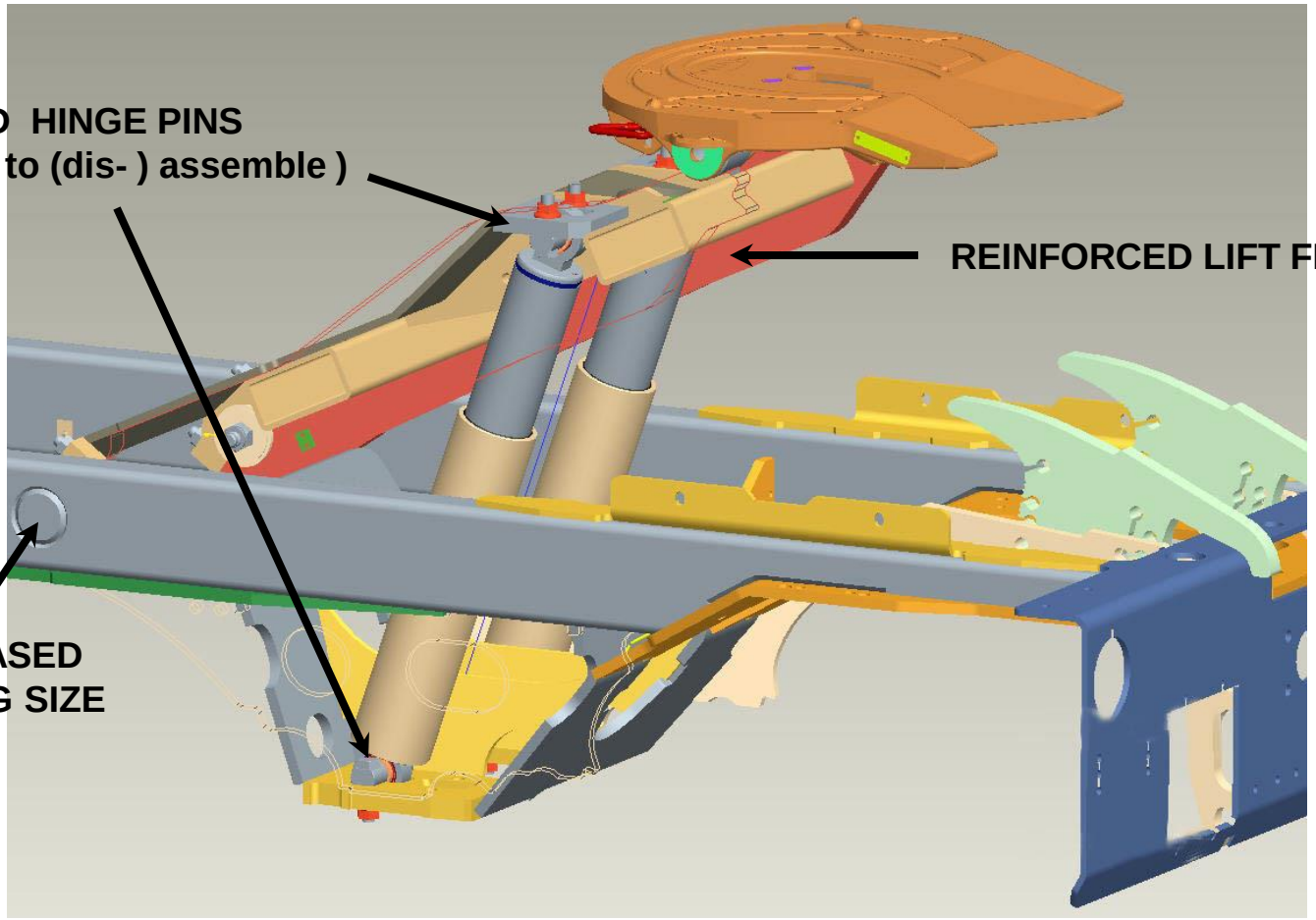

> STANDARD REAR BUMPER

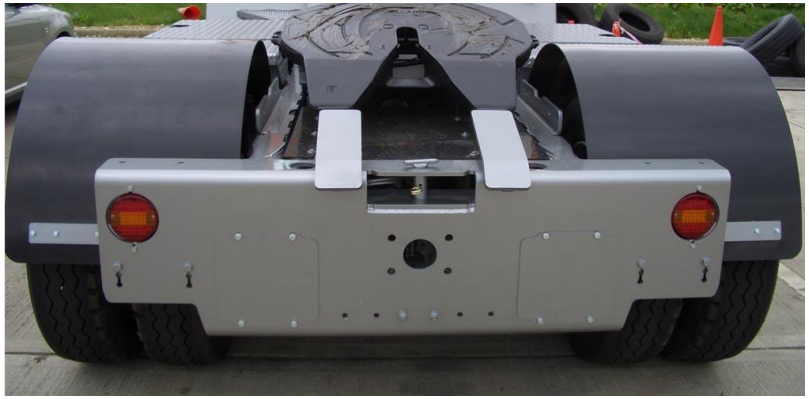

Prepaired for installation of all kind of rear / working lights / connectors etc.

MAIN COMPONENTS

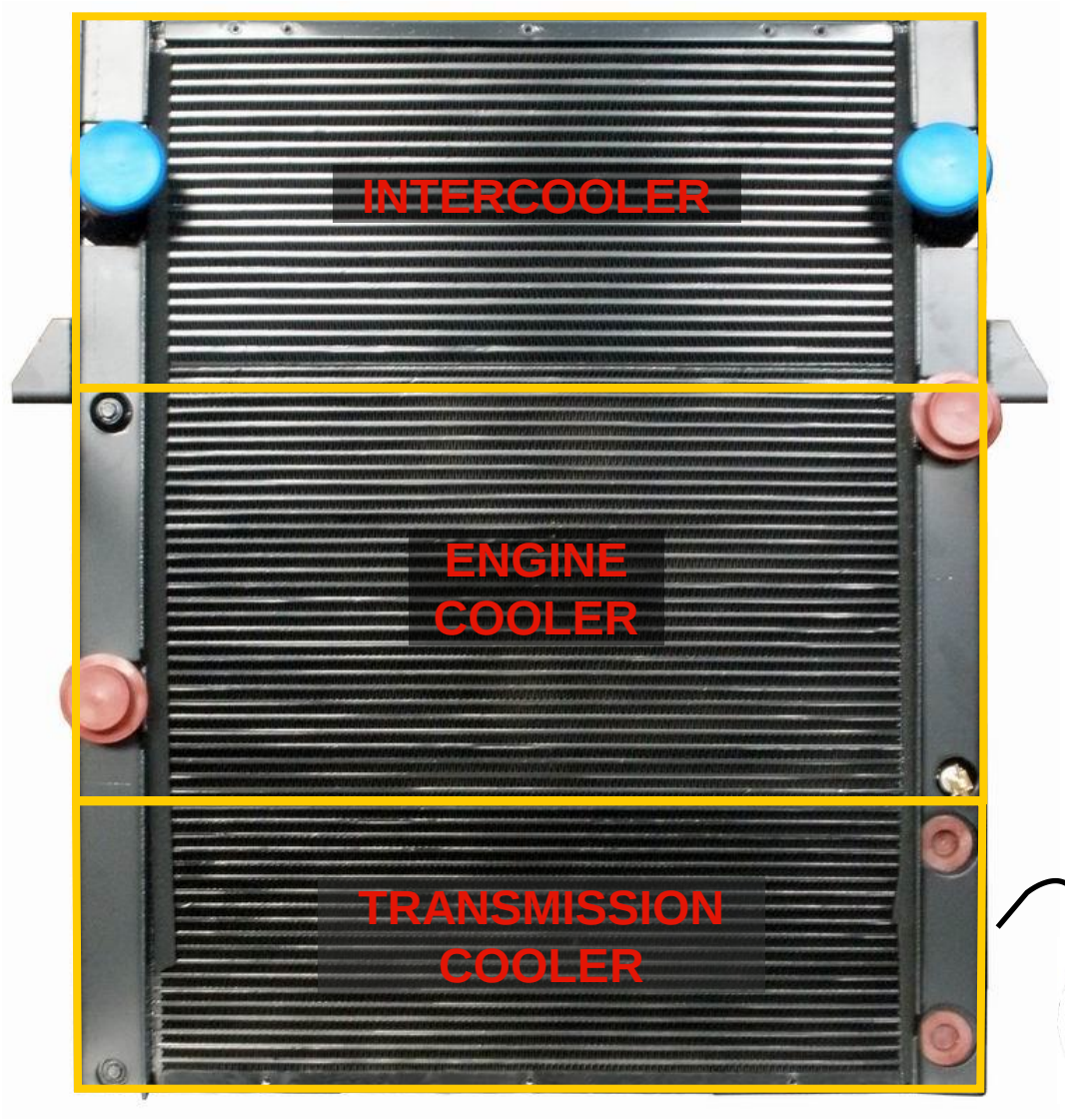

> RADIATOR

- > Enlarged frontal surface
- > 3 independent coolers on top of each other
- > Independent cooler processes
- > More open structure
- > Easier to clean

THERMOSTATIC VALVE

> ENGINE AIR INTAKE SYSTEM

(Air filter always located on turbo side)

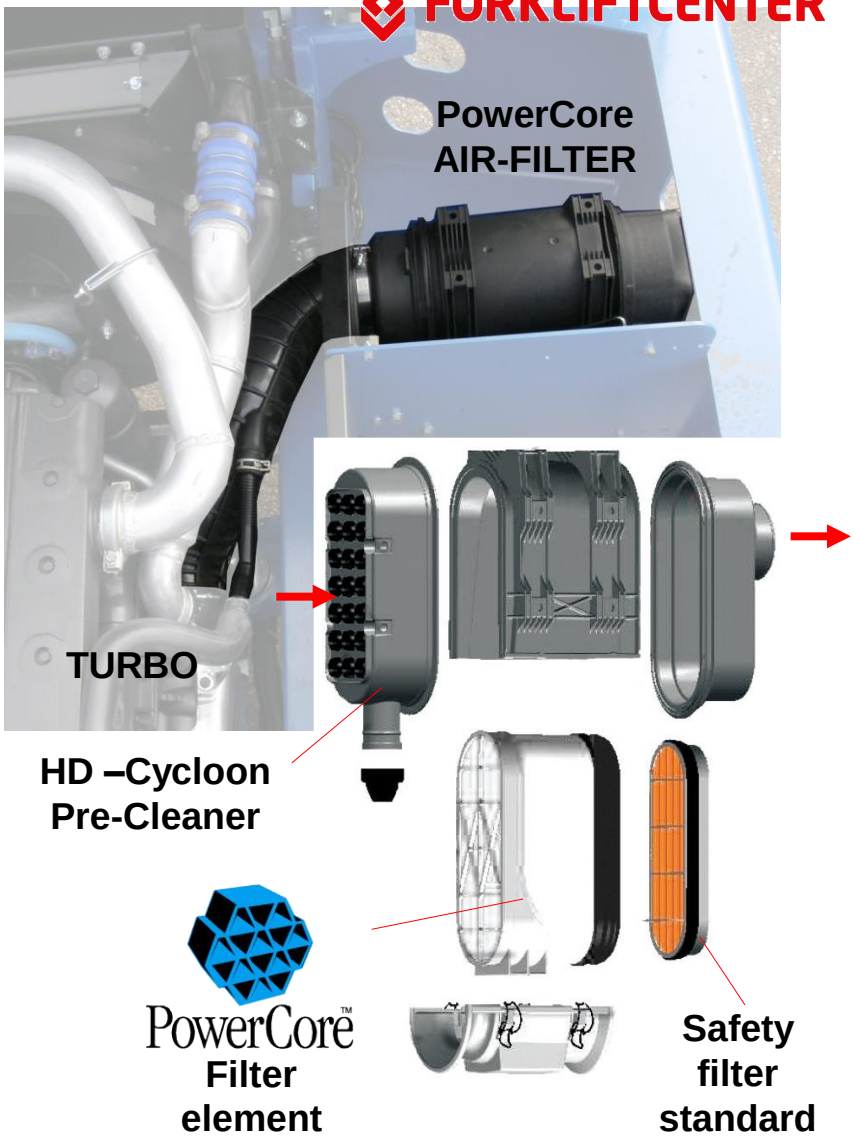

> Standard for EU-Stage 2 - 3A / Tier 2 - 3

> Standard for EU-Stage 3B - 4 / Tier 4i – 4f & Euro 5

TERBERG SPECIAL VEHICLES

MAIN COMPONENTS

FORKLIFTCENTER

> ENGINES

EU Stage 4 / Tier 4f

NEW

VOLVO PENTA

TAD870VE
(160kW)

SCR Aftertreatment

More info

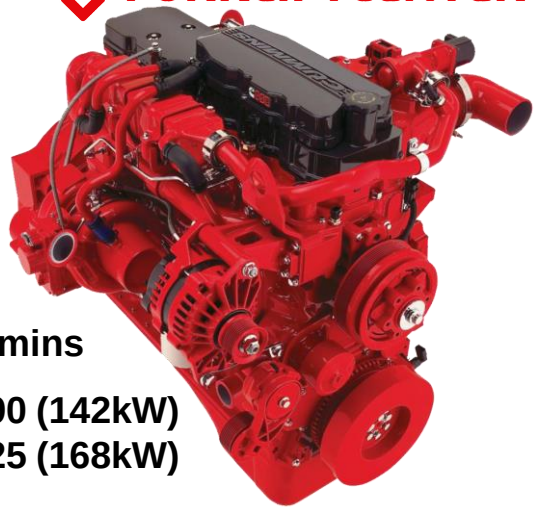

Cummins

QSB6.7-190 (142kW)
QSB6.7-225 (168kW)

SCR Aftertreatment

More info

EU Stage 3B / Tier 4i

MERCEDES

OM 934 LA
(129 / 170kW)

SCR Aftertreatment

More info

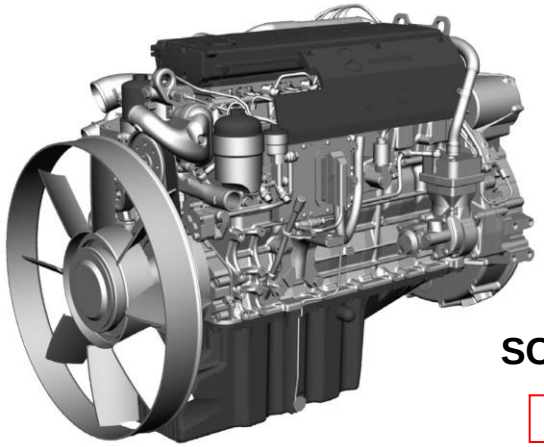

MERCEDES

OM 926 LA
(175kW)

SCR Aftertreatment

More info

TERBERG SPECIAL VEHICLES

MAIN COMPONENTS

FORKLIFTCENTER

> ENGINES

EU Stage 3A / Tier 3
For outside EU / USA / CA only

CUMMINS
QSB6.7 173 (129kW)
QSB6.7 220 (164kW)

More info ▶

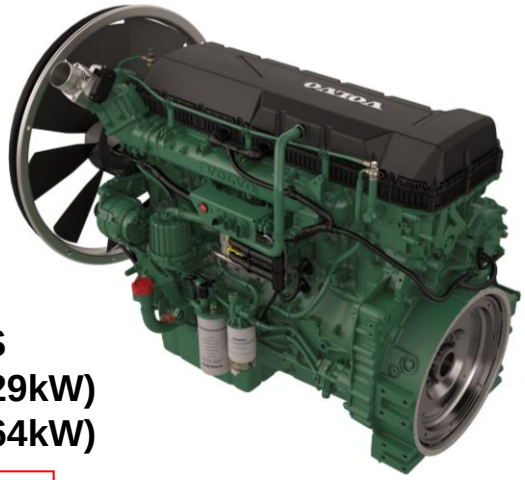

NEW

VOLVO PENTA
TAD850VE
(160kW)

More info ▶

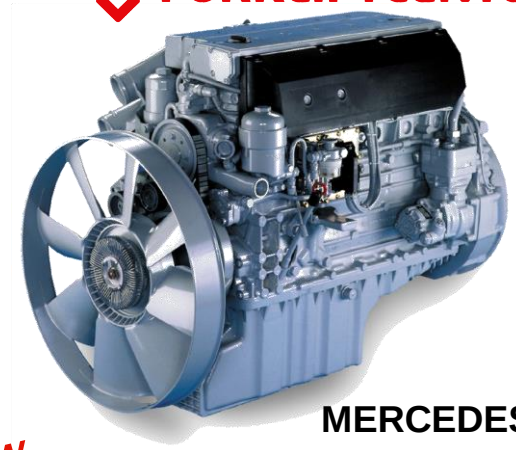

MERCEDES
OM 906 LA
(130 / 170kW)

More info ▶

Euro5 On-road regulations

CUMMINS
ISB6.7E5 205 (146kW)
ISB6.7E5 225 (162kW)

SCR Aftertreatment

More info ▶

EU Stage 2 / Tier 2
For outside EU / USA / CA only

VOLVO PENTA
TAD720VE (170kW)

More info ▶

> ENGINE EXHAUST SYSTEM

> Standard for
EU Stage 2 – 3A / Tier 2 – 3
(RHD version shown)

> For Mercedes
EU Stage 3B - 4 / Tier 4i - 4f with
SCR Aftertreatment
(LHD version shown)

> ENGINE EXHAUST SYSTEM

> For Cummins
EU Stage 4 / Tier 4f & Euro 5 with
SCR Aftertreatment
(LHD version shown)

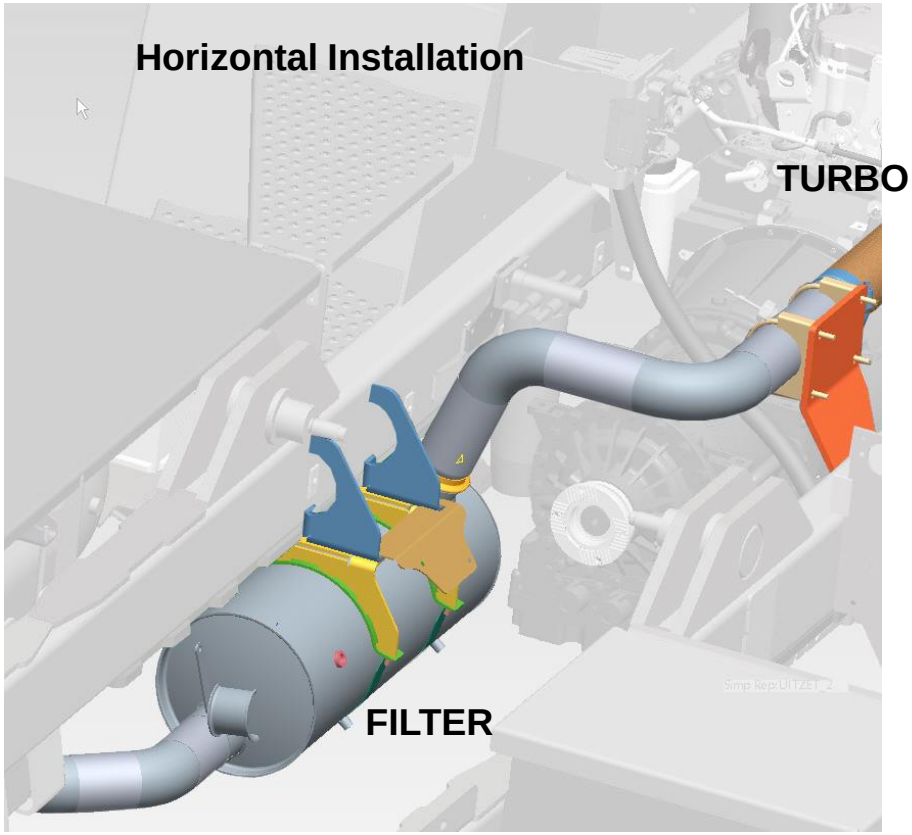

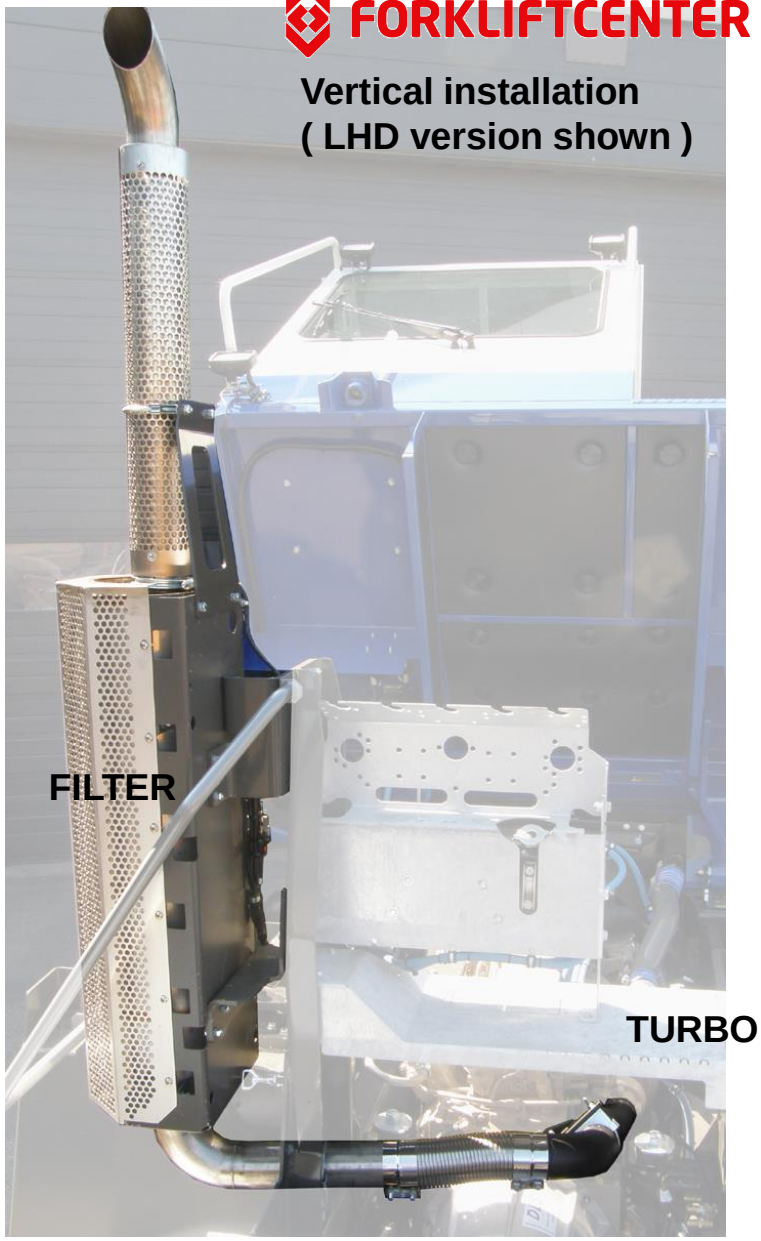

> TRANSMISSIONS

ALLISON 3000

More info

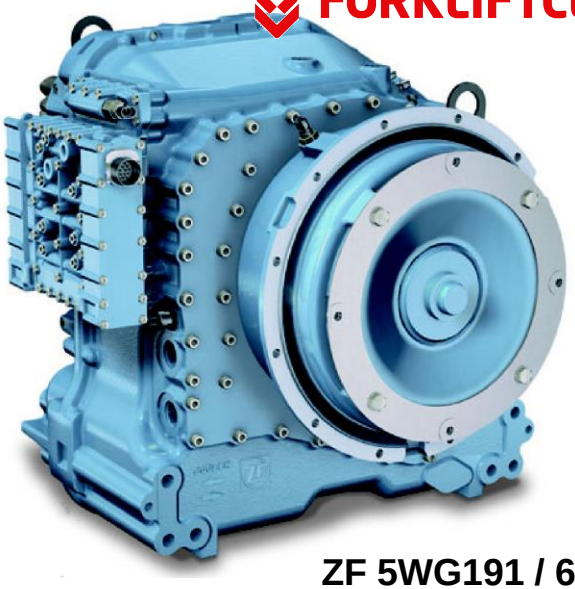

ZF 5WG191 / 6WG211

More info

ZF 3WG161 / 3WG171

> FRONT AXLE

Non-Driven

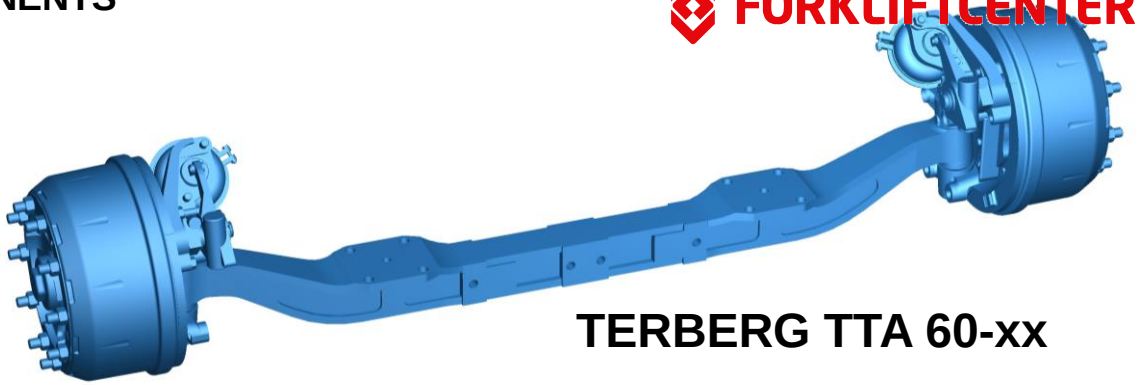

TERBERG TTA 60-xx

- Medium duty (10Ton @ 20km/h)
- Drum brake (S-cam)
- Optional park brake available

VOLVO FA8.2-LOW

- Heavy duty (11Ton @ 20km/h)
- Drum brake (Z-cam)
- Optional park brake available
- Option for YT 182 / 222

TERBERG TTA62-xx

- Heavy duty (11Ton @ 20km/h)
- Drum brake (S-cam)
- No park brake option available

MAIN COMPONENTS

> REAR AXLE

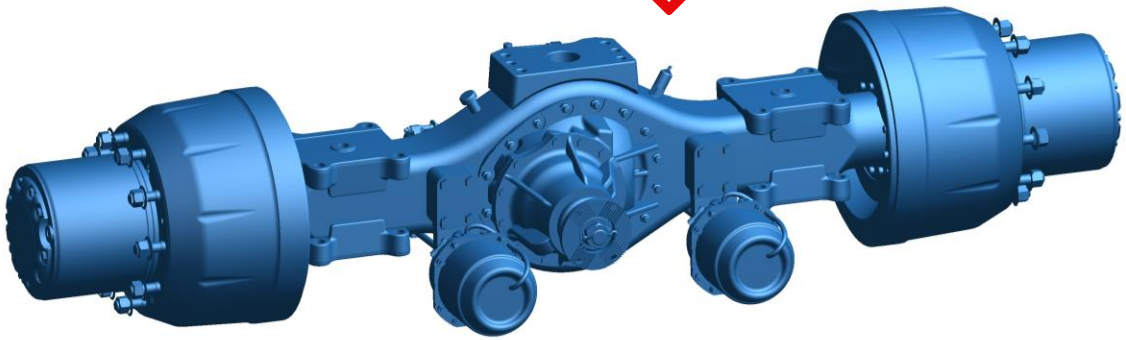

TERBERG TTA 70-xx

- Drum brake (S-cam)
- Ratio's 9.49:1 / 11.98:1

OPTION YT 182 / 222:

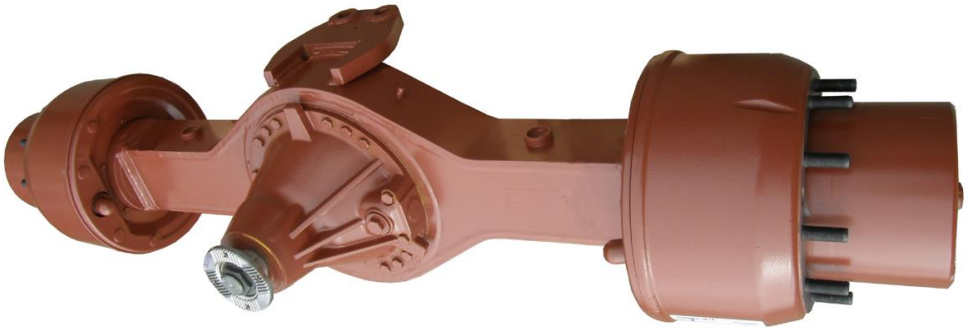

KESSLER D81PL478

- Drum brake (simplex wedge)
- Ratio's 9.76:1 / 12.73:1 / 16.13:1

KESSLER D81PL477

- Disk brake
- Ratio's 13.2:1 / 16.36:1

All Axles fully bolted,
no weld on parts

> HYDRAULIC SYSTEM

- Priority valve, low noise
- Steering orbitrol:Dynamic load sensing, low noise,
- Modular lift valve assembly
- Single acting lift cylinders

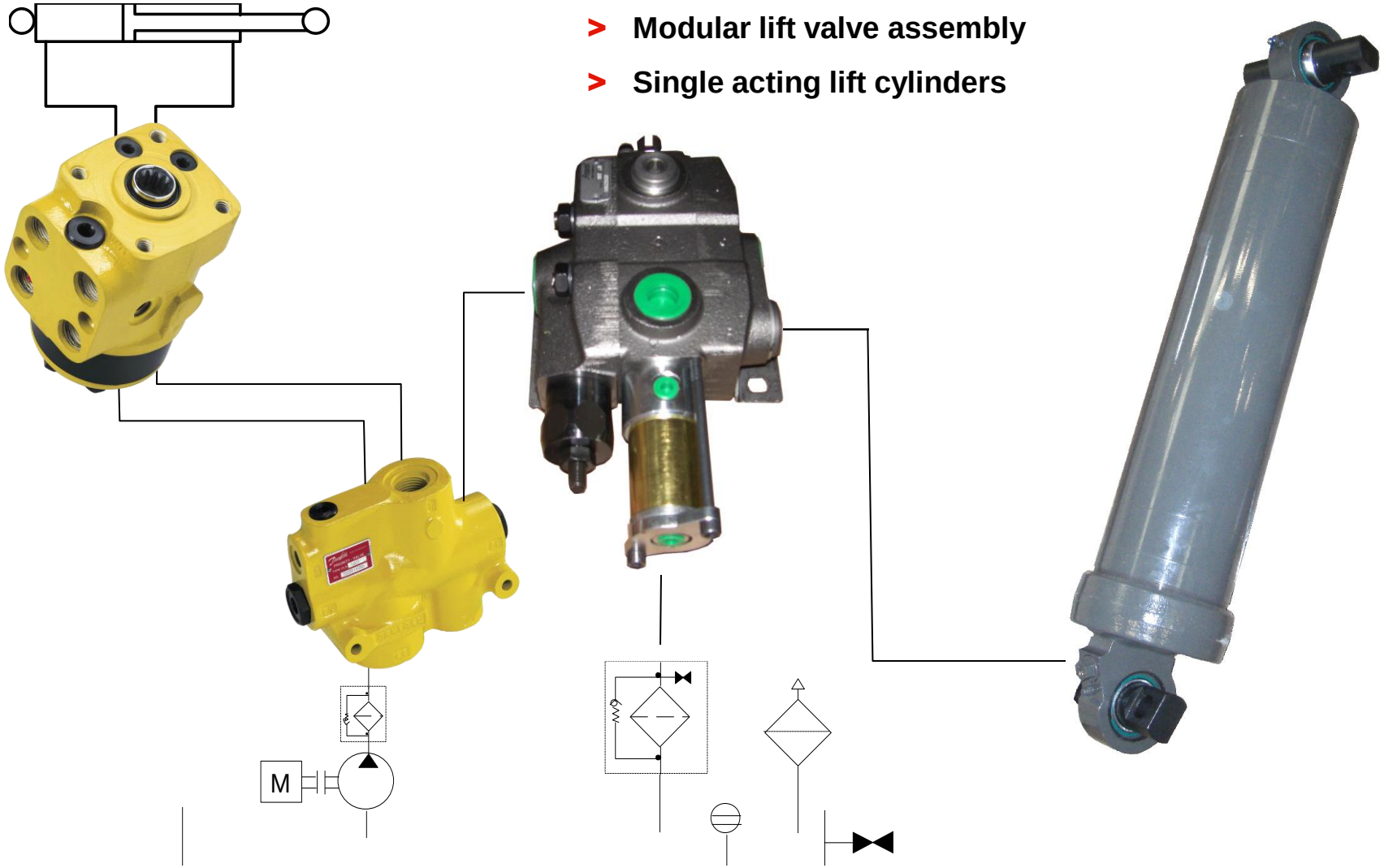

MAIN COMPONENTS

> **HEAVY DUTY**
2” & 3.5”
FIFTHWHEEL

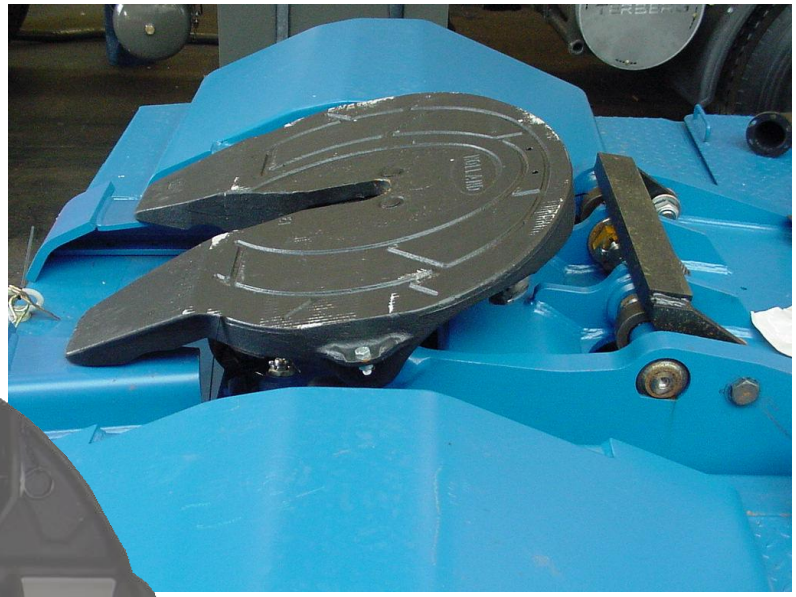

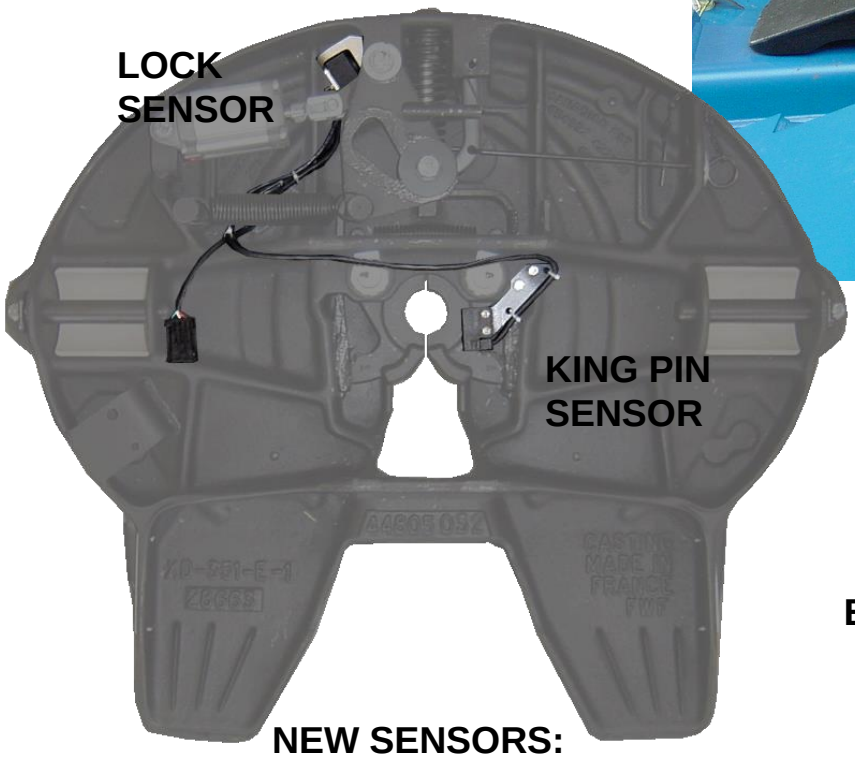

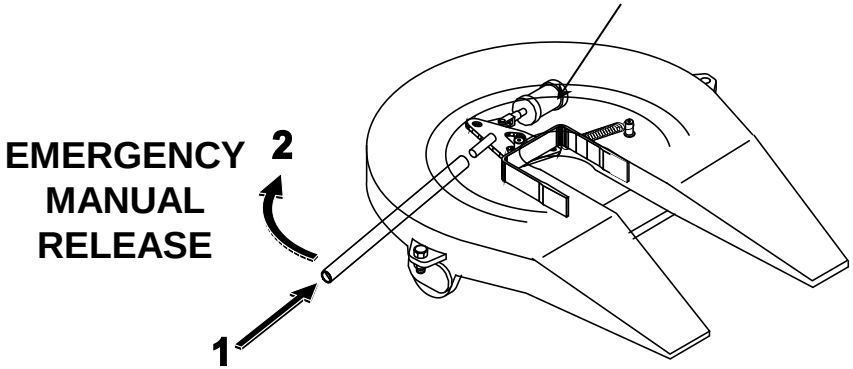

NEW SENSORS:

- Lock sensor better positioned
- King pin sensor not sensitive for metal debri

TERBERG SPECIAL VEHICLES

FORKLIFTCENTER

Options shown is a selection
of most common used.
More options are available,
ask your Terberg representative for
more details.

OPTIONS

TERBERG YT - 182 / 222 / 282

OPTIONS

> LEFT AND RIGHTHAND DRIVE

> FULL WIDTH CABIN

For use as trainings vehicle or as crewcab

> CABIN SIDE DOOR

> CABIN REAR SLIDING DOOR

> AIRSUSPENDED ISRI DRIVER SEAT

> Optional seat: 6500 / 517

> Optional seat: 6500 / 517 Pro

Equipped as 6500/517 but with extra:

- **Lower seat cushion adjustment**
- **Horizontal suspension**
- **Lumbar adjustment**
- **Heating**

> AIRSUSPENDED ISRI DRIVER SEAT

> Optional seat: 6860 / 880 Lux

Equipped as 6860 / 880, with extra:

- **Horizontal suspension**
- **Seat heating**

> Optional seat: 6860 / 870 Lux

Equipped as 6860 / 880 Lux, with extra:

- **Integrated 3P seat belt**
- **Adjustable / removable head rest**

> Arm rests are optional

> SECOND SEAT

FOLD AWAY

> AIRCONDITIONER

- > Integrated in heater
- > Manual operated or with ECC

(With ECC no speedometer possible)

> RDT MOUNTING PROVISON

> ROOF WINDOWS / MANHOLES

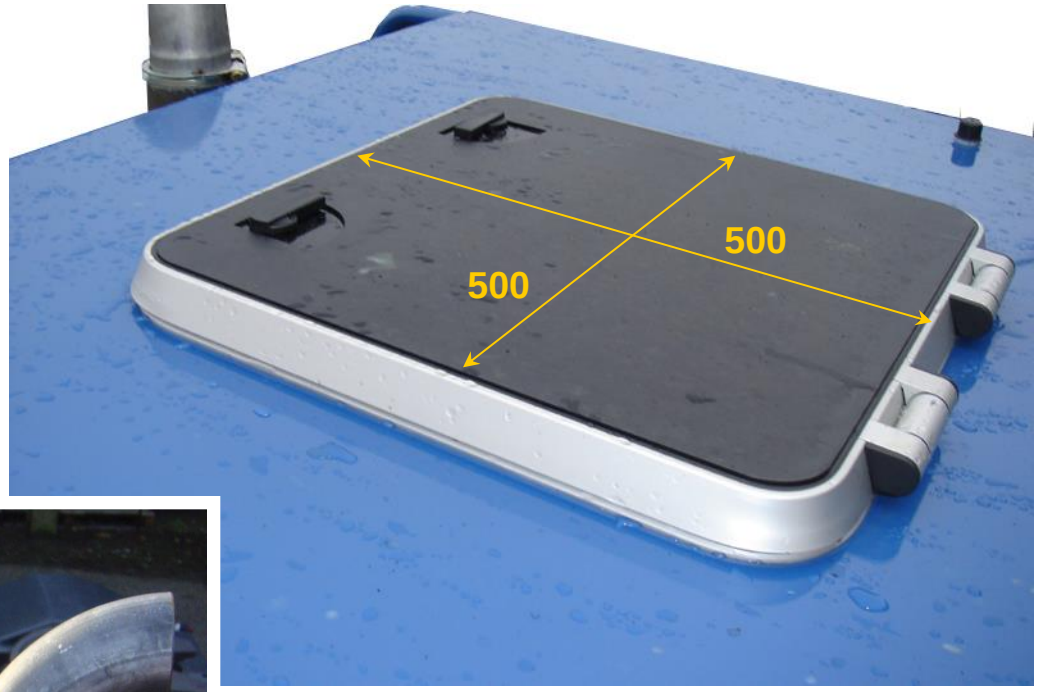

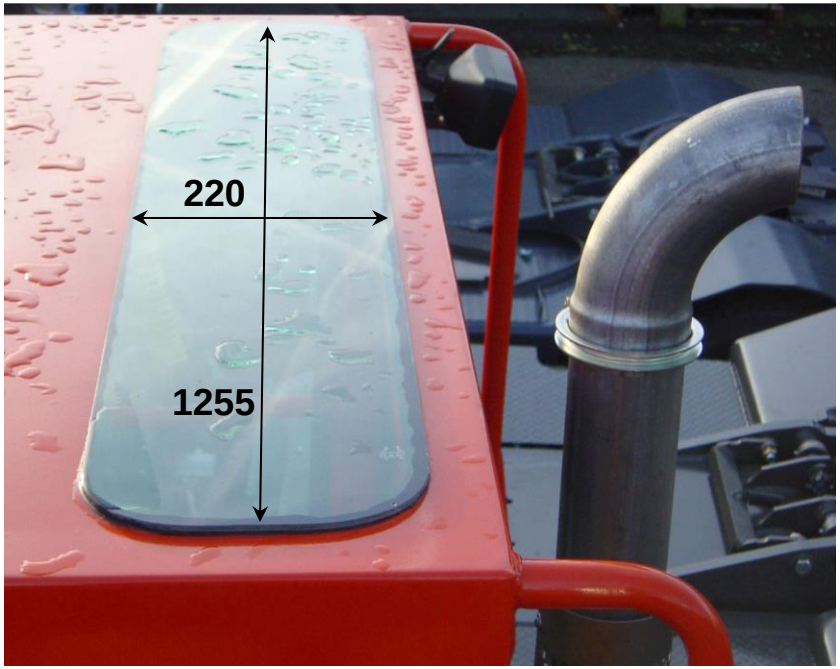

> MIRRORS

> Curb Mirror

> Wide angle Mirror

> Standard Mirror

> LNG POWER
(Liquefied Natural Gas)

> Exhaust Catalyst

> Vent stack

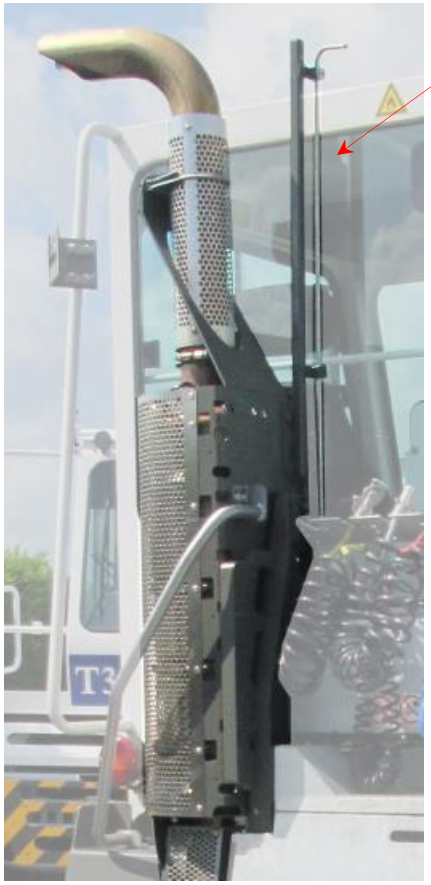

CUMMINS
ISL G 250 (186kW)

More info

> LNG Gas tank
(Isolated)

> Fill: Parker Kodiak
Vent: QDV connection

> Required Min.
wheel base 3500mm

> CNG POWER
(Compressed Natural Gas)

CUMMINS
ISL G 250 (186kW)

More info

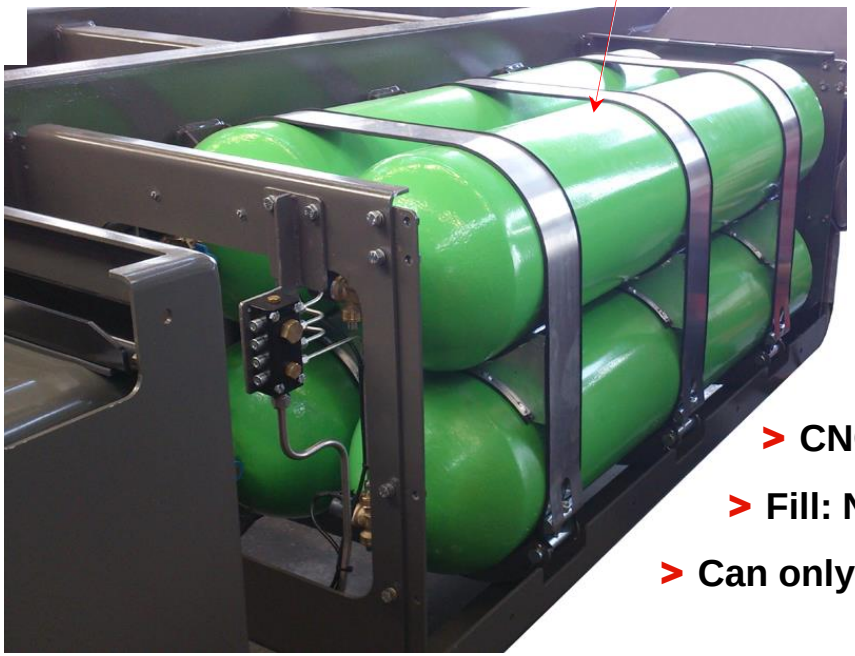

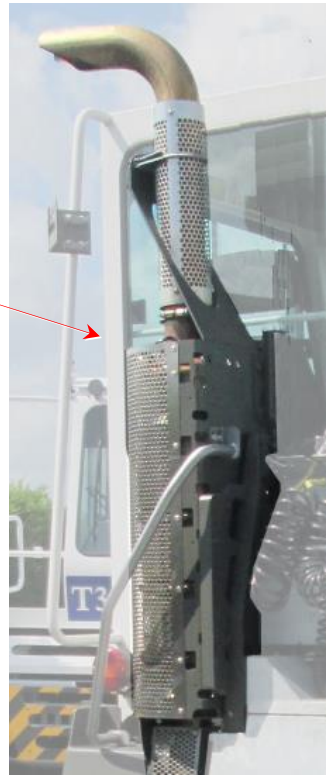

> Exhaust Catalyst

> CNG Gas tanks (L & R)

> Fill: NGV1 optional: NGV2

> Can only be used in extended wheel base vehicles

> EXHAUST GAS PURIFIER

- > Catalytic filter (CAT)
- > Sintered metal filter (CSMF)
- > No additional heater required
- > Pressure datalogger with warning for cleaning
- > Cleaning possible with high pressure water
- > Only available for Euromot 3A / Tier3 engines

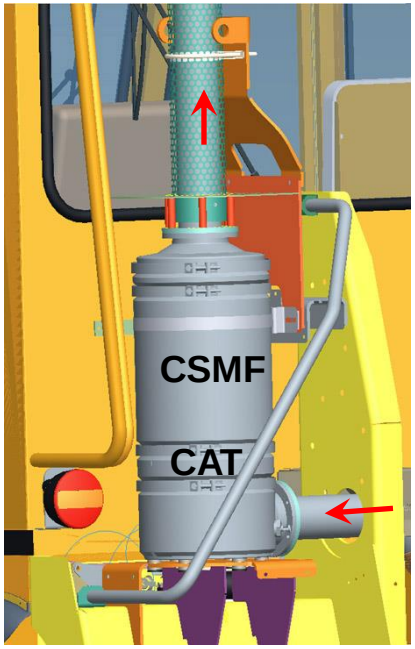

> IMPACT PROTECTION SYSTEMS

> Front bumper reinforcement

> Bolt on front protections

> Additional cab guard

> LIGHTS

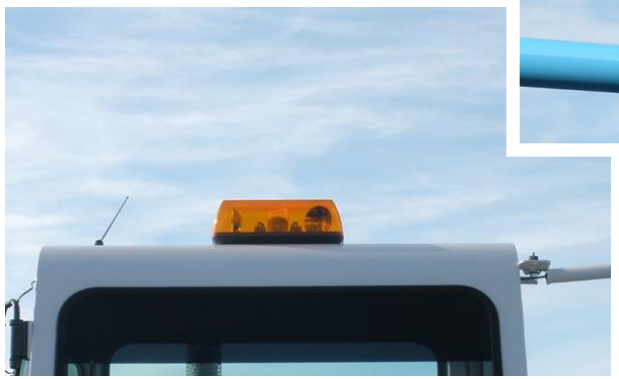

> Flashing Beacon

> Search light

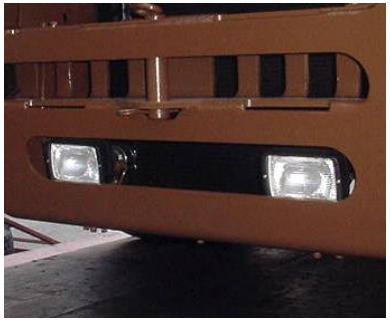

> Work lights

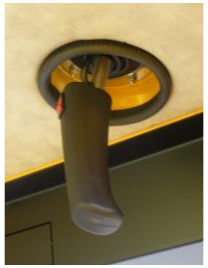

> LED FRONT LIGHTS

> TRAILER CONNECTIONS AIR BRAKE SYSTEM

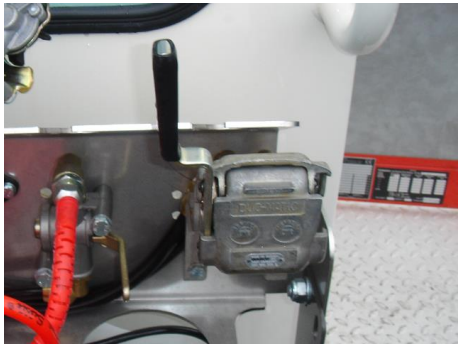

> C - coupling

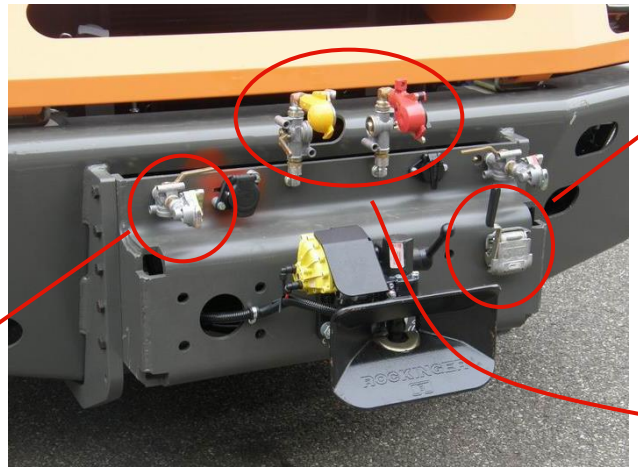

> Duo-matic

> Palm coupling (glad hands)

> Palm coupling (glad hands) automatic

> AIR SUSPENSION

UP TO 10 TON ON AIR

OVER 10 TON ON RUBBER SUSPENSION

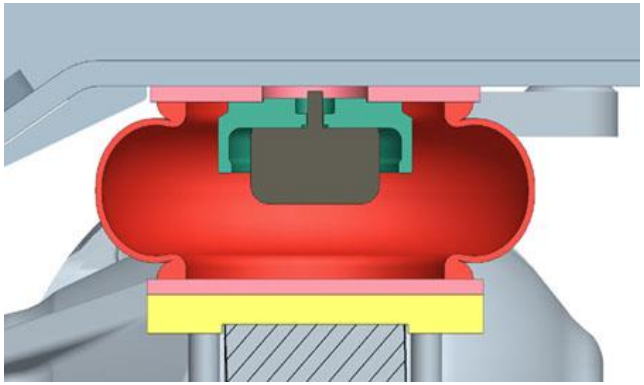

> **Rubber cushion in air bellow**

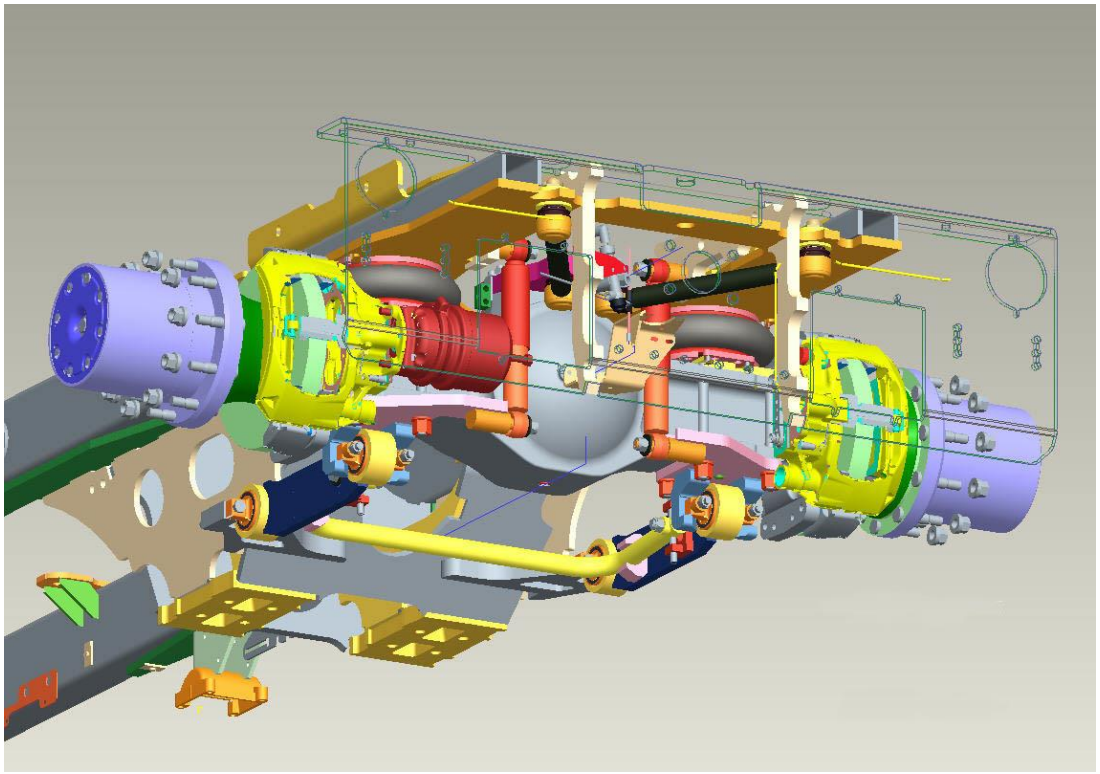

TERBERG SPECIAL VEHICLES

OPTIONS

FORKLIFTCENTER

> INDUSTRIAL TYRES

- High allowable wheel loads
- Max. single tire load shown, Front axle x2, Rear axle x4
- Longer lifetime

> MICHELIN

> XZM

- 9.00 R20
  4500kG @ 25km/h
  5850kG @ 10km/h
- 10.00 R20
  5300kG @ 25km/h
  6890kG @ 10km/h
- 11.00 R20
  5800kG @ 25km/h
  7540kG @ 10km/h
- 12.00 R20
  7100kG @ 25km/h
  9230kG @ 10km/h

> XTT

- 280/75 R22,5
  6300kG @ 25km/h
  7280kG @ 10km/h
- 310/80 R22,5
  7762kG @ 25km/h
  8970kG @ 10km/h

- Tubeless Bead Seal mounting

> CONTINENTAL

> Terminal transport

- 300/80 R22,5
  7100kG @ 25km/h
  8100kG @ 10km/h

> Tractor master

- 310/80 R22,5
  7760kG @ 25km/h
  8970kG @ 10km/h

> MUDGUARDS

- > Bolted construction
- > Afterwards adjustable over 3 positions for changed tyre sizes
- > Easy replaceble

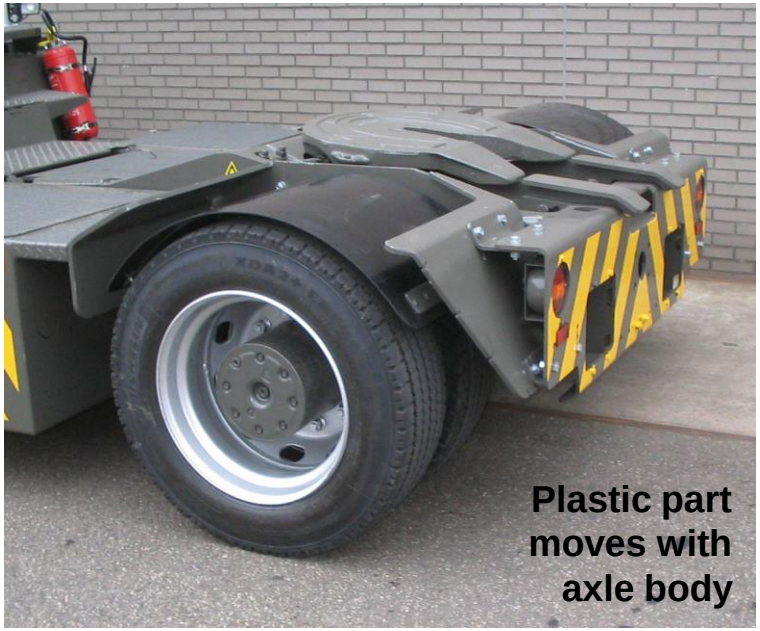

> FRONT

> Drawbar coupling

> Register coupling

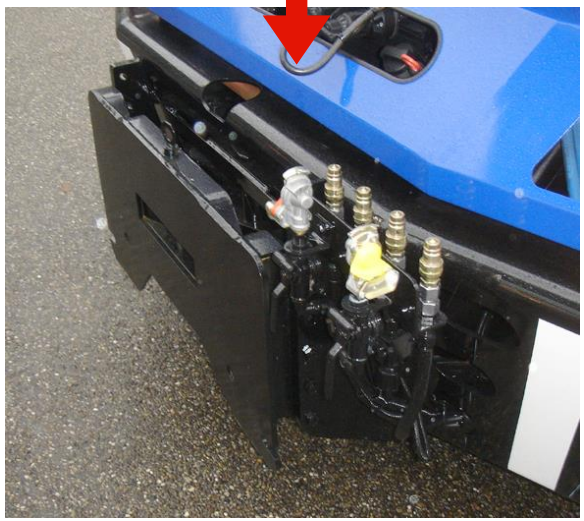

> Mounting plate

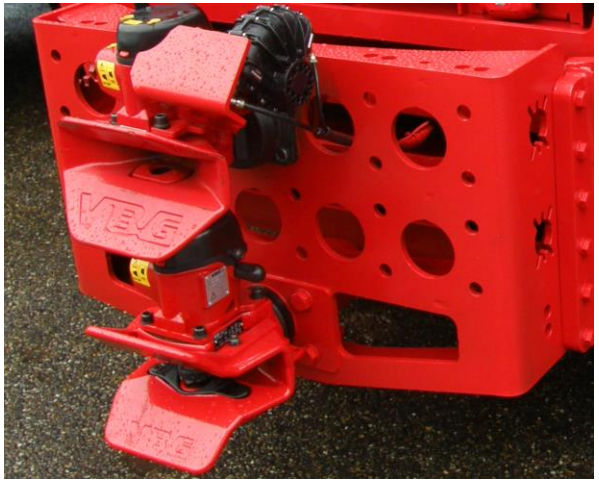

TERBERG SPECIAL VEHICLES

OPTIONS

> REAR

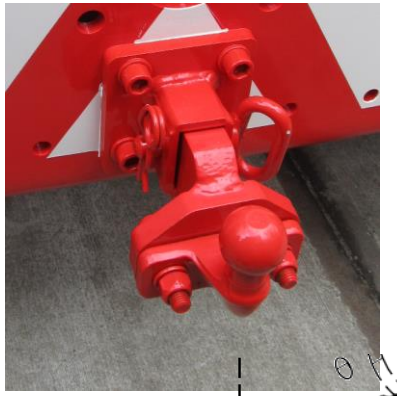

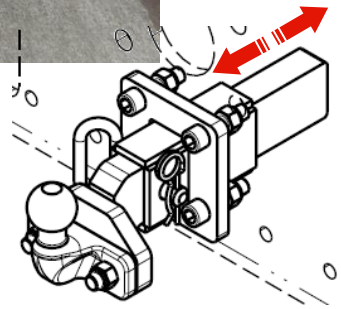

> Caravan coupling

> Drawbar coupling

> Register coupling

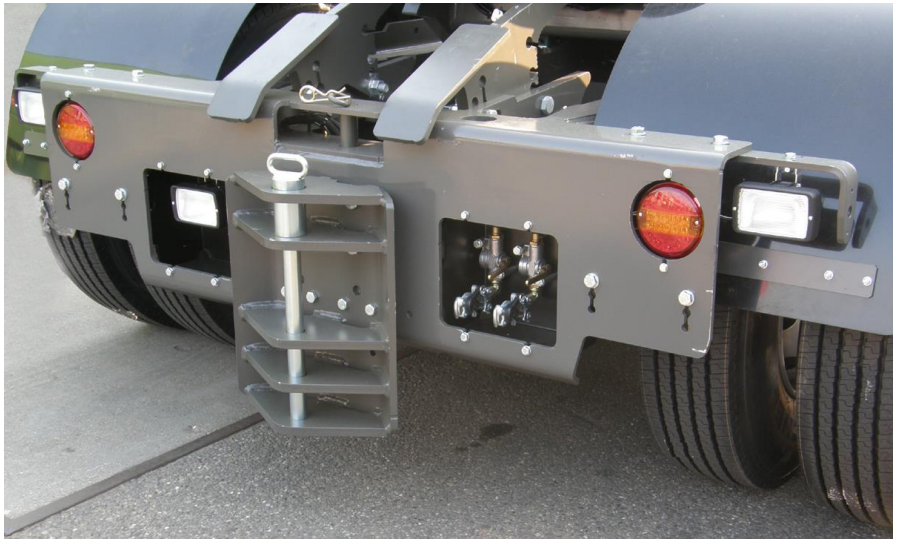

> OPTIONAL DOUBLE ACTING LIFT CYLINDERS

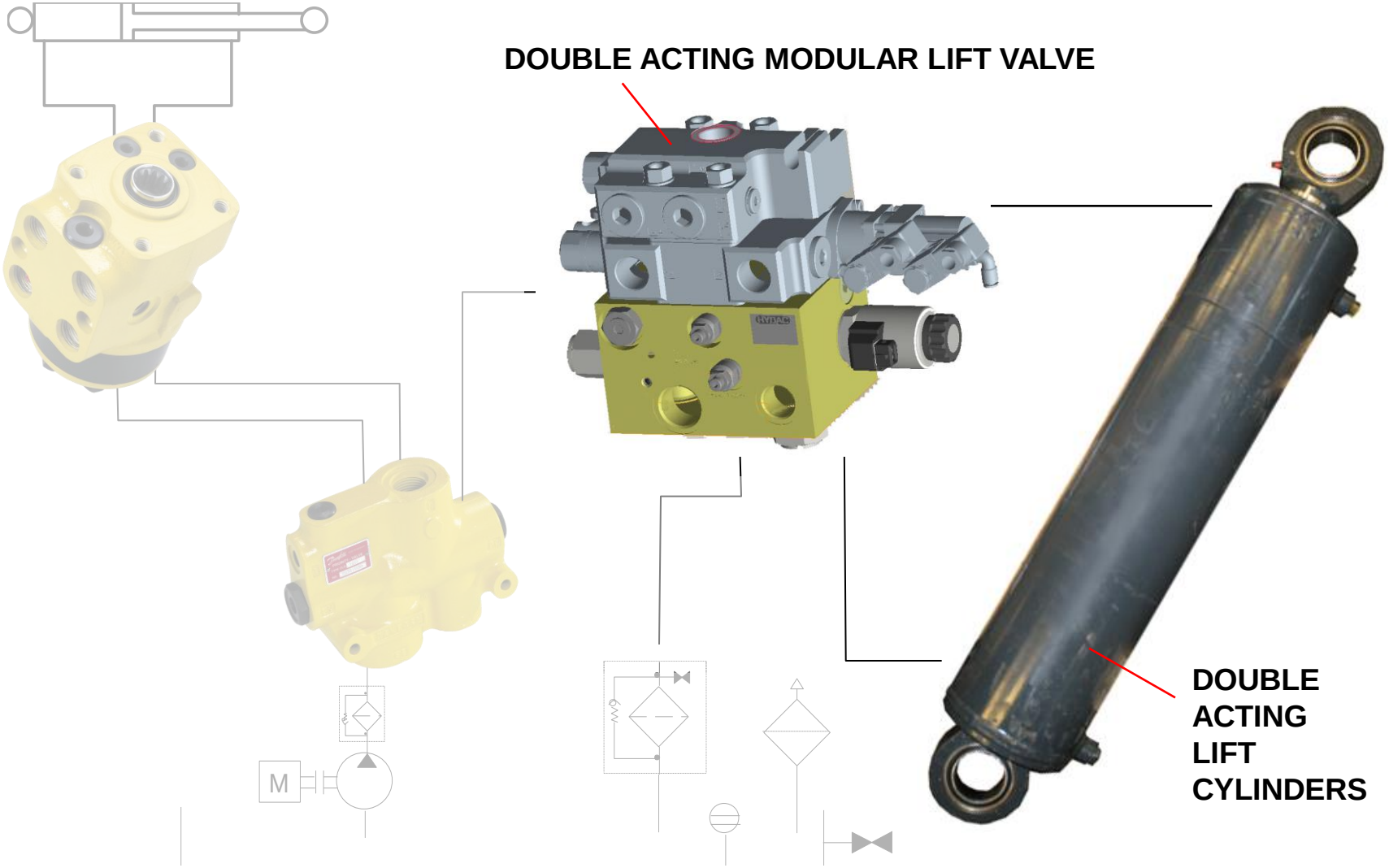

> MODULAR HYDRAULIC SYSTEM

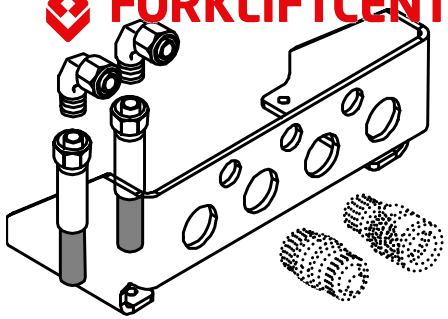

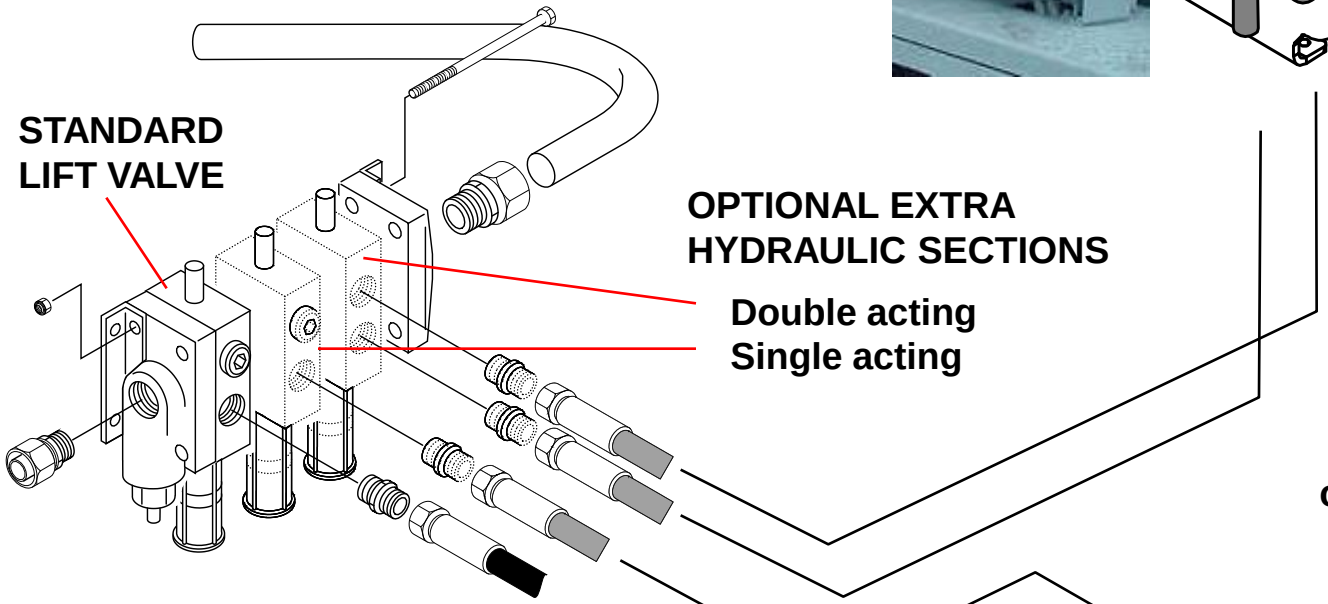

Trailer connectors
on customer request

OPERATION OF
EXTRA HYDRAULICS

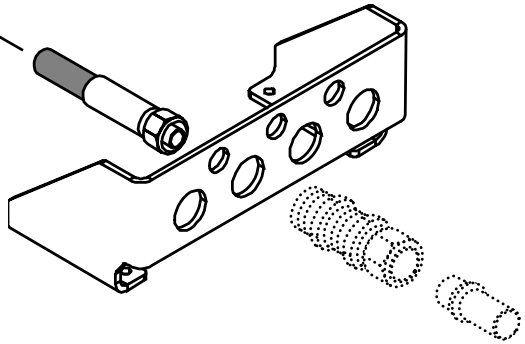

> OPTIONAL TIPPER TRAILER HYDRAULICS

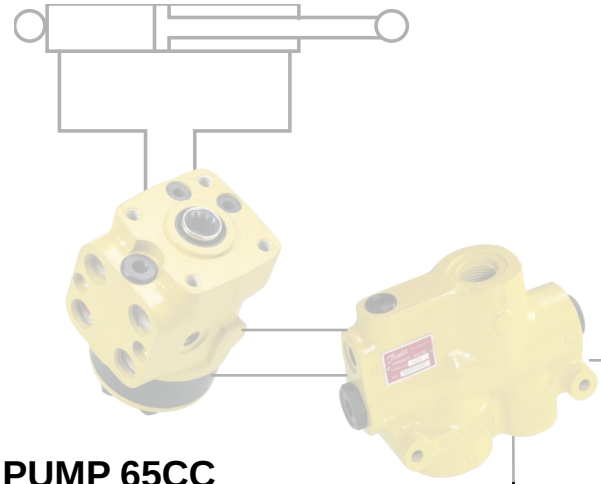

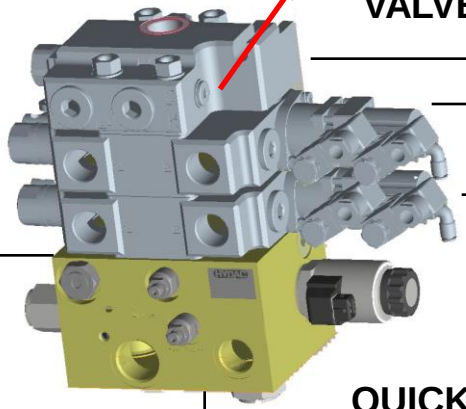

DOUBLE ACTING MODULAR LIFT VALVE

DOUBLE ACTING LIFT CYLINDERS

PUMP 65CC
160LPM
Full RPM

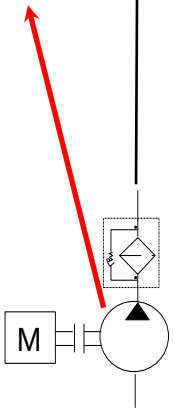

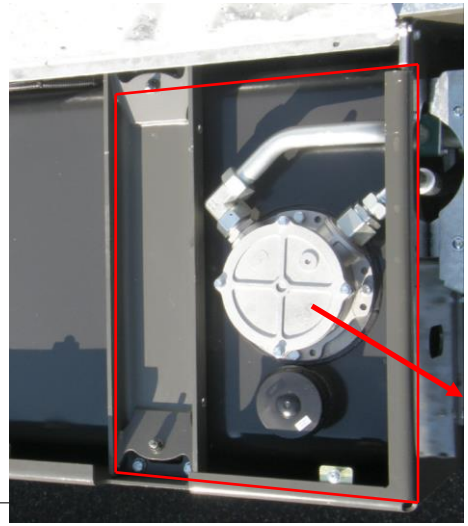

LARGE CAPACITY TANK (221L / NET 145L) & RETURN FILTER

QUICK RELEASE VALVE

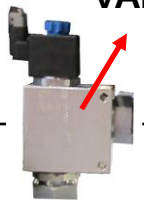

TERBERG SPECIAL VEHICLES

OPTIONS

FORKLIFTCENTER

> **HEAVY DUTY 2” – 3.5” FIFTH WHEEL**

> **Single jaw locking mechanism**

EMERGENCY MANUAL RELEASE

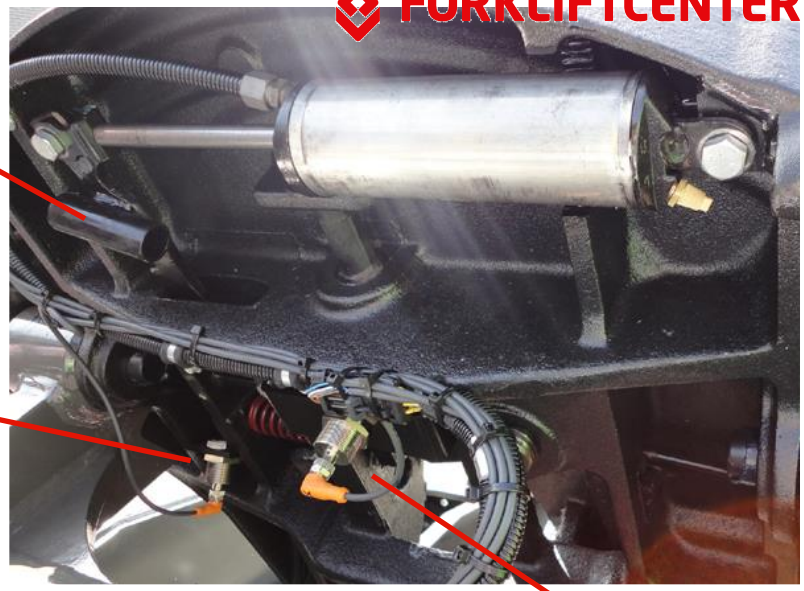

LOCK SENSOR

KING PIN SENSOR

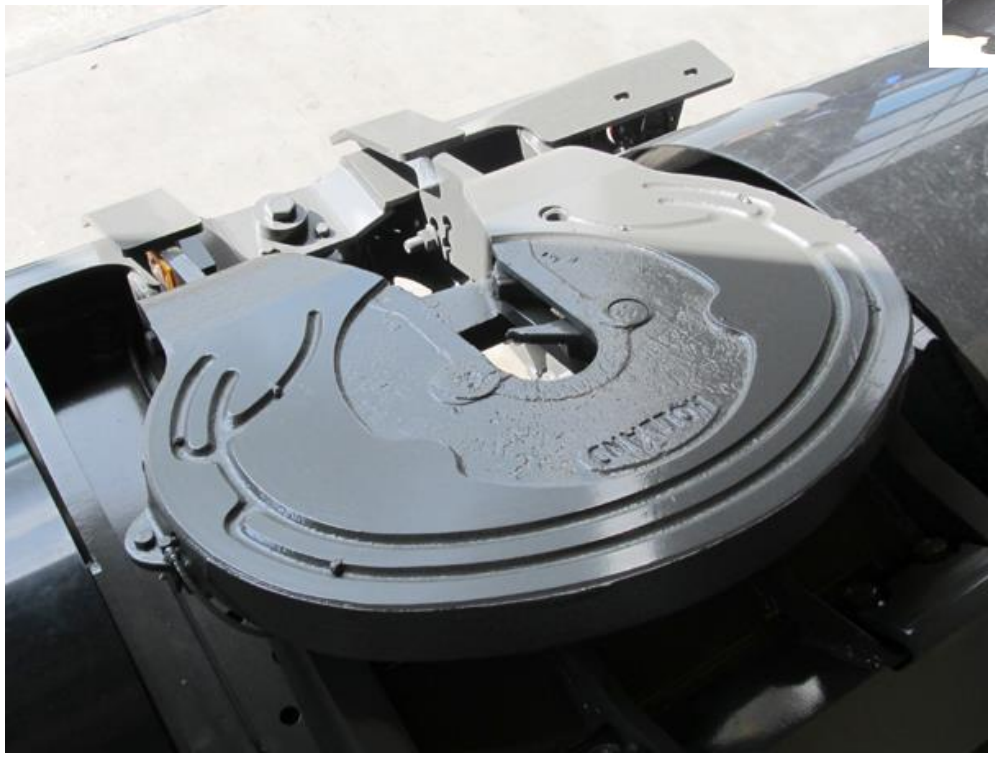

AIR RELEASE OPERATED FROM CAB

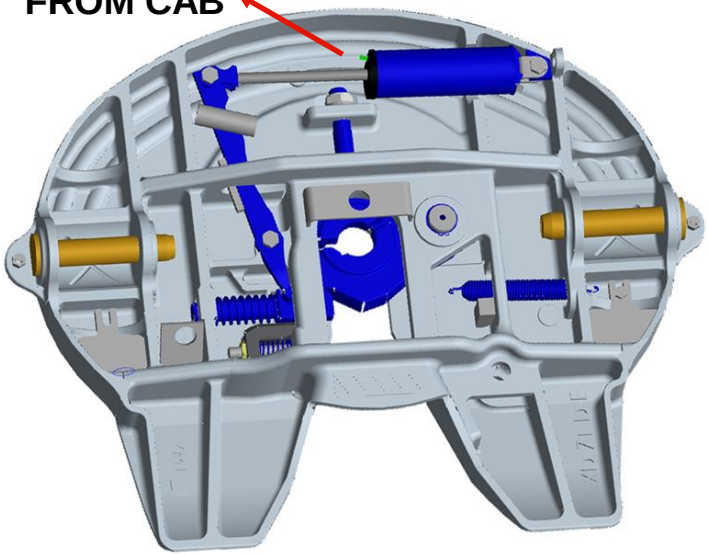

> GREASE COVER PLATE

Protects Air valves and rear axle from grease comming from the fifth wheel

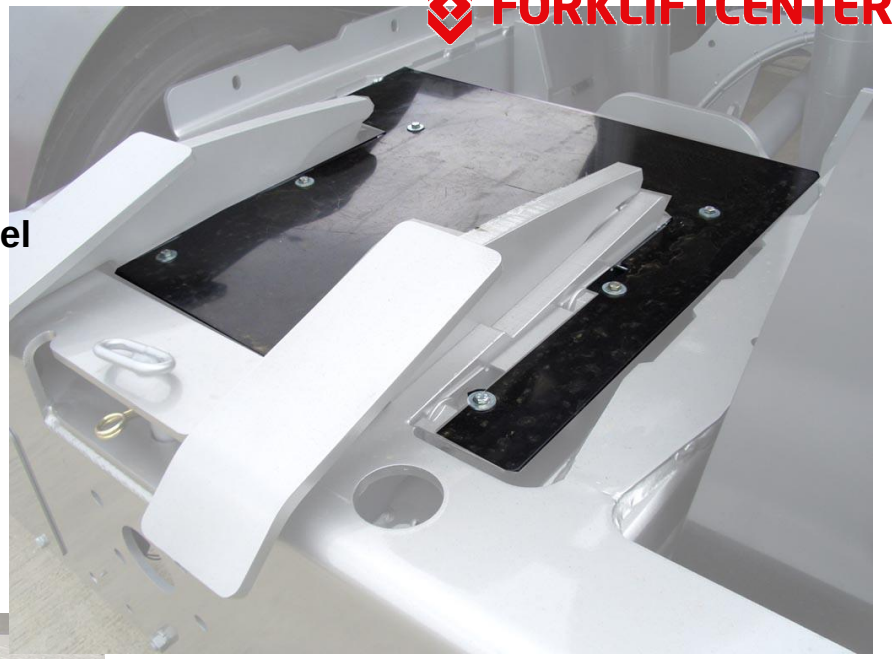

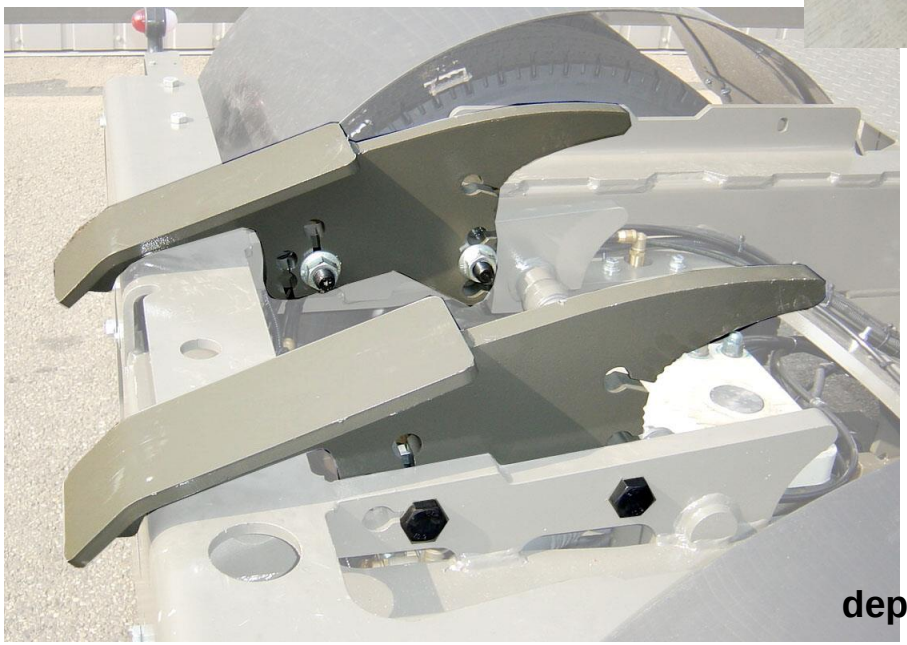

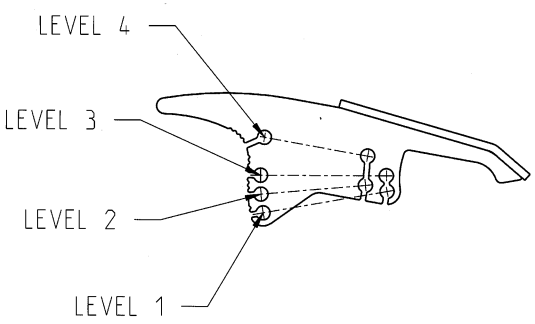

> LEAD UP RAMPS

In 4 positions adjustable, depending on tyre size and mudguard type

> GOOSE NECK SUPPORT

(RIGID)

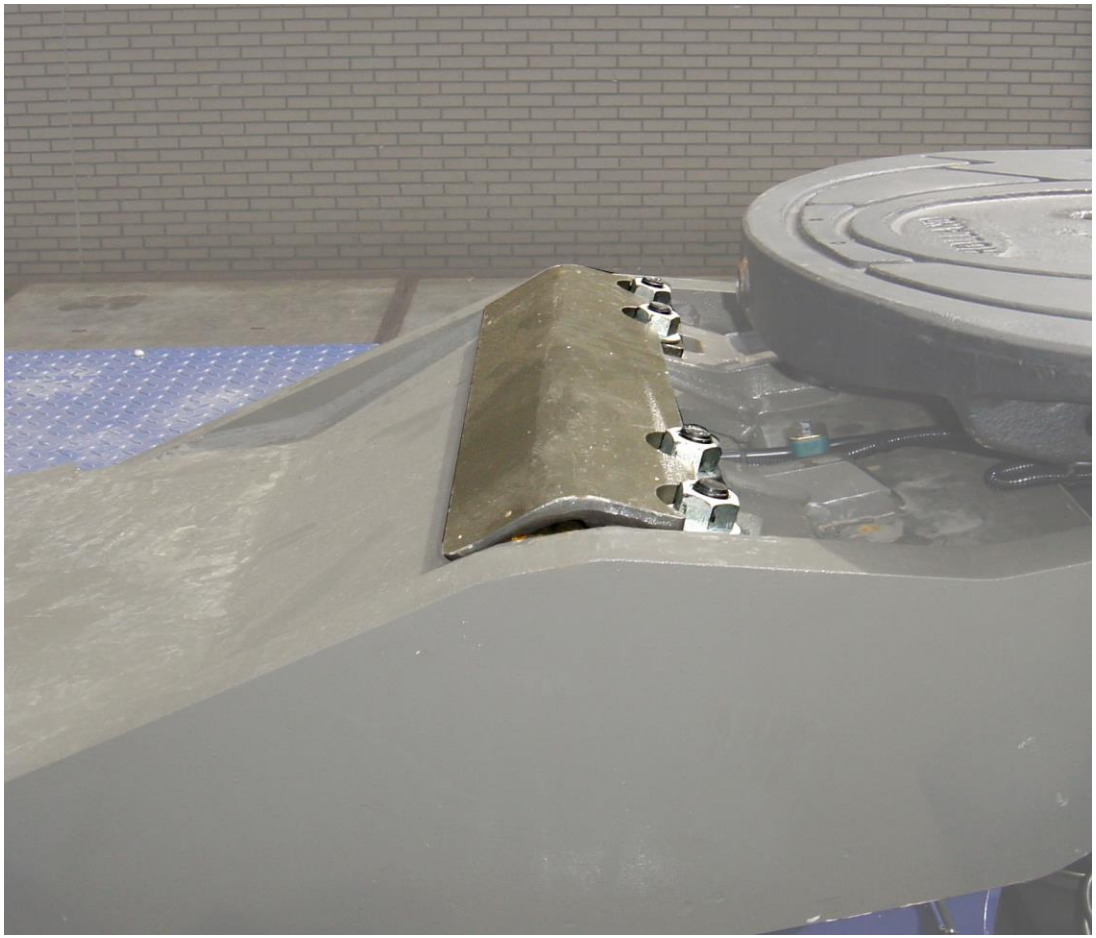

> BALLAST

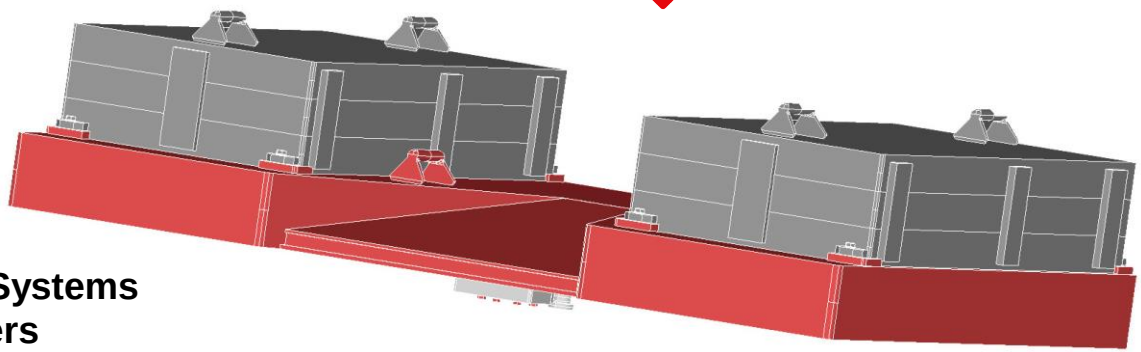

- For operating Multiple Trailer Systems or pulling heavy drawbar trailers
- Modular: Base plate 6,6Ton
  Can be increased with loose plates to 8,5 or 12,2 Ton
- Ballast is connected to the tractor fifth wheel with a king pin (2” or 3,5”) + wedge.
  To mounting locations available
- Parking stand available:
  enables the tractor to (dis) attach the ballast without the help of crane / fork lift.

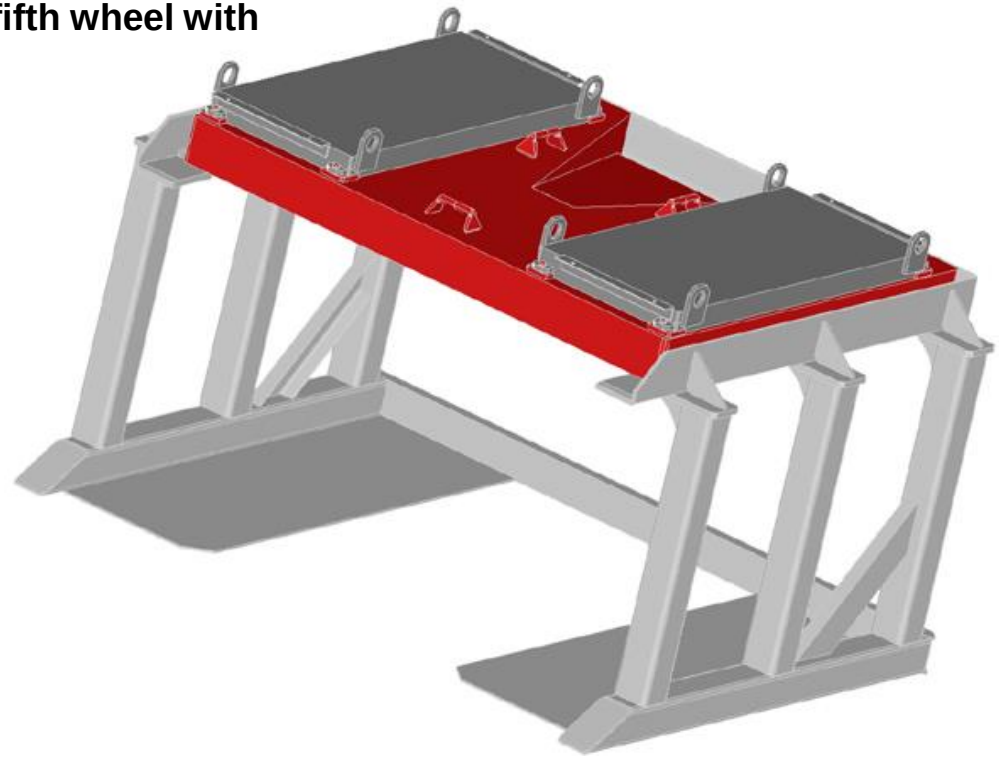

TERBERG SPECIAL VEHICLES

TAILOR MADE

FORKLIFTCENTER

4 x 2

Airport Tow tractor

6 x 4

6 x 2 / 4

8 x 4